SRNE

User Manual

Solar Hybrid Inverter

HEBP4880U240-Pro
HEBP48100U240-Pro
HEBP48120U240-Pro

Ver. : V1.5 2025-12-23

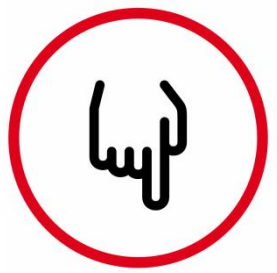

READ THE INSTRUCTIONS COMPLETELY BEFORE OPERATING THE EQUIPMENT

Check the utility voltage before turning ON the unit.

Verify the inviter’ t programmed grid type before connecting to the utility.

The unit will be programmed in 120/240V Split-Phase at 60Hz by default.

Disregarding these instructions could result in permanent damage to the unit.

The Company shall not be liable for inverter damage caused by ：

① Damage caused by improper use or use in a wrong location.
② Photovoltaic modules with an open circuit voltage exceeding the maximum permissible voltage.
③ Damage caused by the operating temperature exceeding the restricted operating temperature range.
④ Dismantling and repair of the inverter by unauthorised persons.
⑤ Damage caused by force majeure: damage during transport or handling of the inverter.

This manual is only for HEBP Series: 4880U240-Pro, 48100U240-Pro, 48120U240-Pro

Content

1. Safety Instruction 1
1.1 Symbols in This Manual 1
1.2 Safety Instructions 1
2. Product Instruction 1
2.1 Product Features 1
2.2 System Connection Diagram 2
2.3 Product Overview 4
2.4 Dimension Diagram 5
3. Installation 6
3.1 Installation Location Selection 6
3.2 Pack List 7
3.3 Tool Preparation 8
3.4 Mounting the Inverter 9
4. Connection Instructions 10
4.1 GRID & LOAD Connection 10
4.2 Generator Connection 11
4.3 Battery Connection 12
4.4 PV Connection 13
5. Wiring Diagram 16
5.1 Standard No-parallel Wiring Diagram 17
5.2 Split-phase Parallel Wiring 17
5.3 Three-phase Parallel Wiring 19
6. Operating Instructions 23
6.1 Operation Interface 23
6.1.1 Physical Buttons 23
6.1.2 LED Indicators 23
6.1.3 LCD Screen 24
6.1.4 Real Time Data 25
6.1.5 Historical Information 27
6.2 Parameter Setting 27
6.2.1 Basic Setting 28
6.2.2 Operating Mode Setting 29
6.2.3 Battery Parameter Setting 31
6.2.4 Grid Parameter Setting: 35
6.2.5 Advanced Setting 37
6.3 Recommended Setting 40
6.3.1 Peak and Valley Electric Charges 40
6.3.2 Generate Power for Self Use 41
6.3.3 Priority to Sell Electricity 41
6.3.4 Battery Storage Charge 42
6.4 Connection Mode 43
7. Communication 46
7.1 Overview 46
7.2 USB-2 Port 46
7.3 WiFi Port 47
7.4 RS485 Port 47
7.5 CAN Port 48
7.6 USB-1 Port 48
7.7 External CT Port 48
7.8 Dry Contact 49
8. Fault and Remedy 50
8.1 Fault Code 50
8.2 Troubleshooting 52
9. Protection and Maintenance 53
9.1 Protection Features 53
9.2 Maintenance 54
10. Datasheet 55

1. Safety Instruction

1.1 Symbols in This Manual

DANGER	DANGER indicates a hazardous situations which if not avoided will result in death or serious injury.
WARNING	WARNING indicates a hazardous situations which if not avoided could result in death or serious injury.
CAUTION	CAUTION indicates a hazardous situations which if not avoided could result in minor or moderate injury.
NOTICE	NOTICE provide some tips on operation of products.

1.2 Safety Instructions

WARNING: This chapter contains important safety and operating instructions. Read and keep this manual for future reference.

- Be sure to comply the local requirements and regulation to install this inverter.
- Beware of high voltage. Please turn off the switch of each power sources before and during the installation to avoid electric shock.
- For optimum operation of this inverter, please follow required specification to select appropriate cable size and necessary protective device.
- Do not connect or disconnect any connections when the inverter is working.
- Do not open the terminal cover when the inverter working.
- Make sure the inverter is well grounding.
- Never cause AC output and DC input short circuited.
- Do not disassembly this unit, for all repair and maintenance, please take it to the professional service center.
- Never charge a frozen battery.

2. Product Instruction

2.1 Product Features

- Self-consumption and feed-in to grid.
- With limit function,prevent excess power overflow to grid.
- With a dual activation function when the li-ion battery is dormant; either mains/photovoltaic power supply access can trigger the activation of the li-ion battery.
- Supports different voltage levels of 100\105\110\115\120\127Vac per phase.

- Supports two MPPT inputs and simultaneous tracking of two solar maximum power charging/carrying capacity functions.
- With individual generator port.
- Smart load function and AC coupling function.
- Time of use function.
- Energy saving mode function to reduce no-load energy losses.
- With two output modes of utility bypass and inverter output, with uninterrupted power supply function.
- LCD large screen dynamic flow diagram design, easy to understand the system data and operation status.

2.2 System Connection Diagram

The diagram below shows the system application scenario of this product. A complete system consists of the following components:

- **PV Modules:** Converts light energy into DC energy, which can be used to charge the battery via an inverter or directly inverted into AC power to supply the load.
- **Grid:** Connected to the utility grid, it can supply the load and charge the battery at the same time.
- **Generator:** The system can also operate with generator when the battery and the PV module power the load.
- **Battery:** The role of the battery is to ensure the regular power supply of the system load when the solar energy is insufficient and there is no mains power.
- **Home load:** Various household and office loads can be connected, including refrigerators, lamps, televisions, fans, air conditioners, and other AC loads.
- **Inverter:** The energy conversion device of the whole system.

The actual application scenario determines the specific system wiring method.

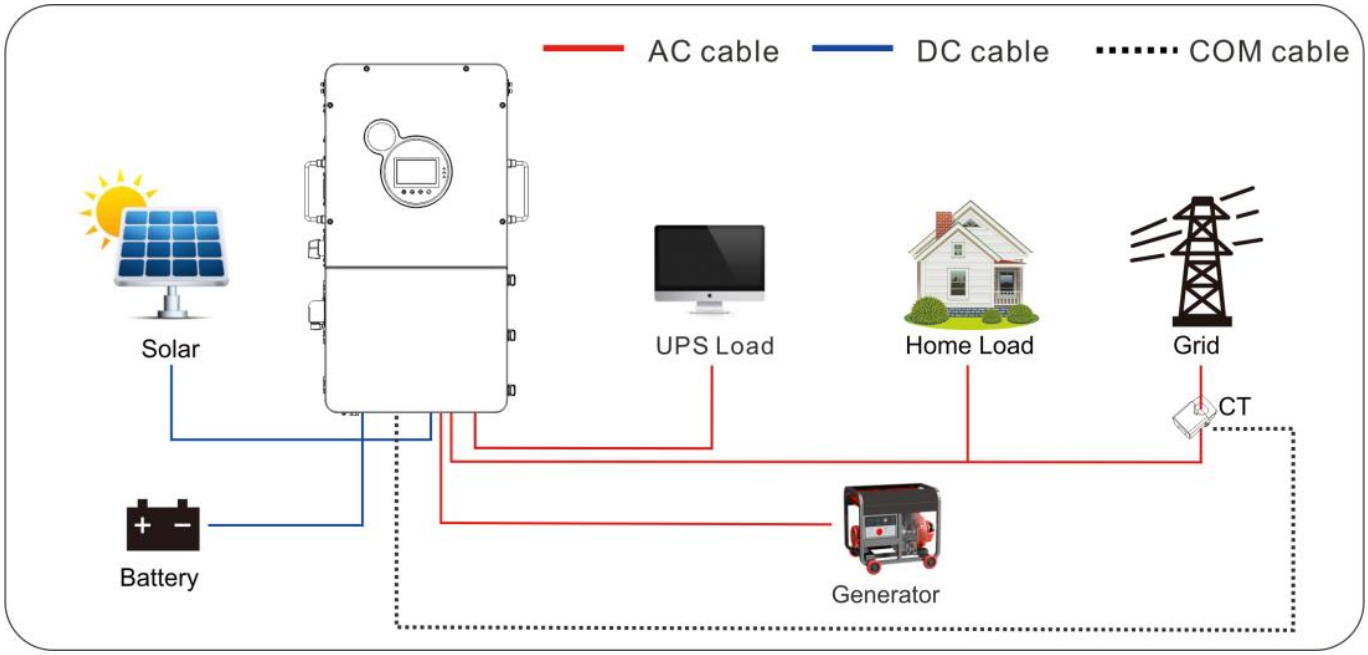

Wiring system for inverter

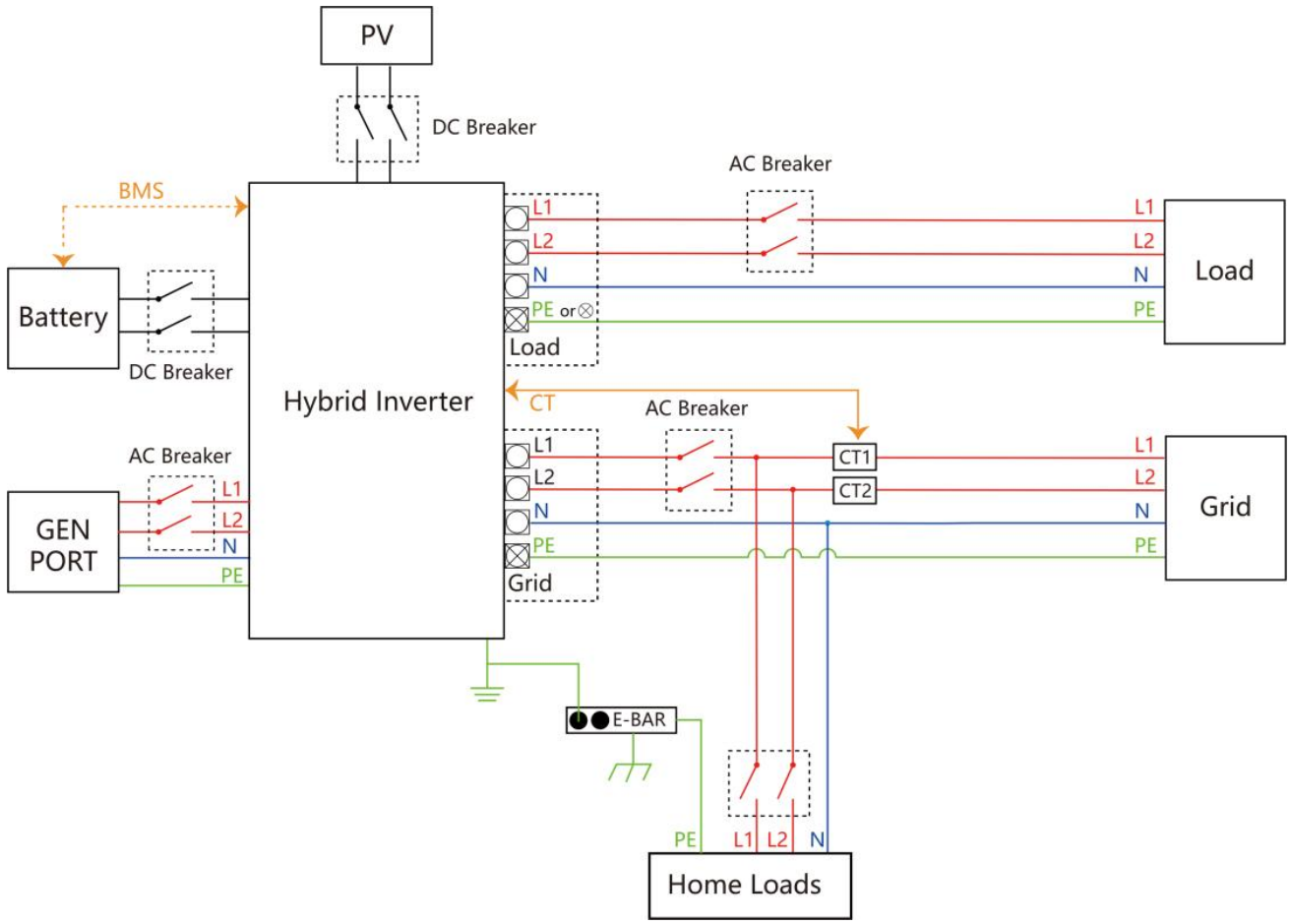

Topologic graph

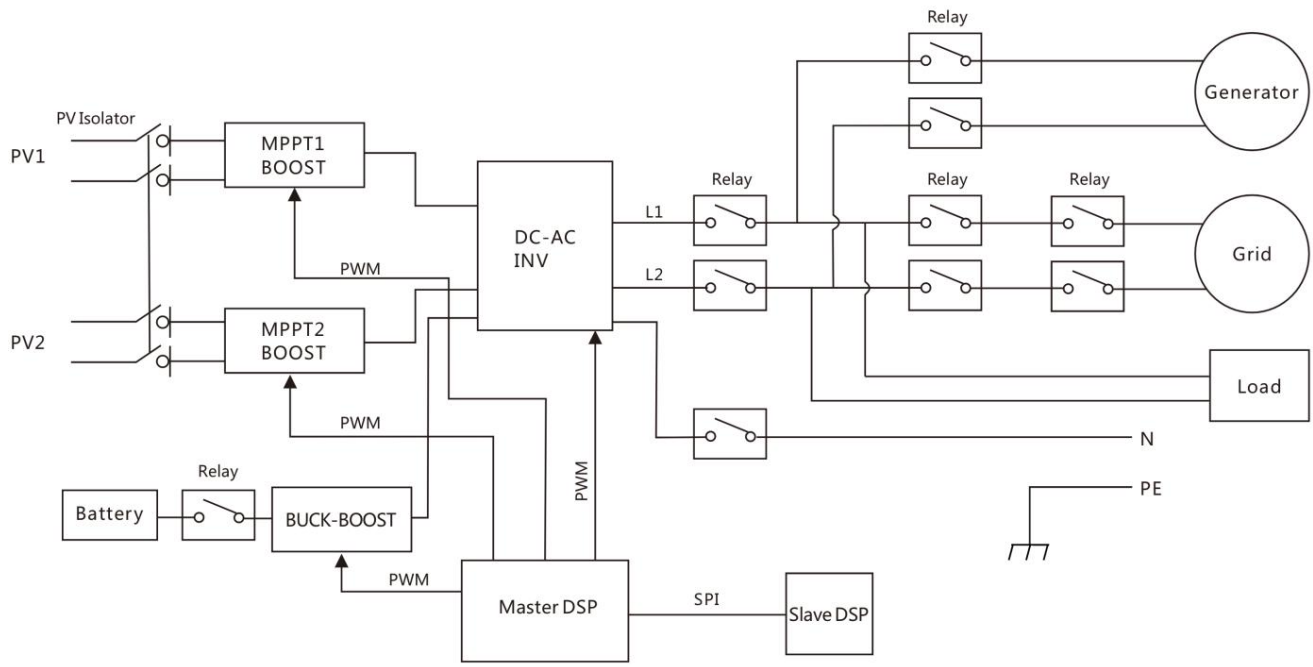

2.3 Product Overview

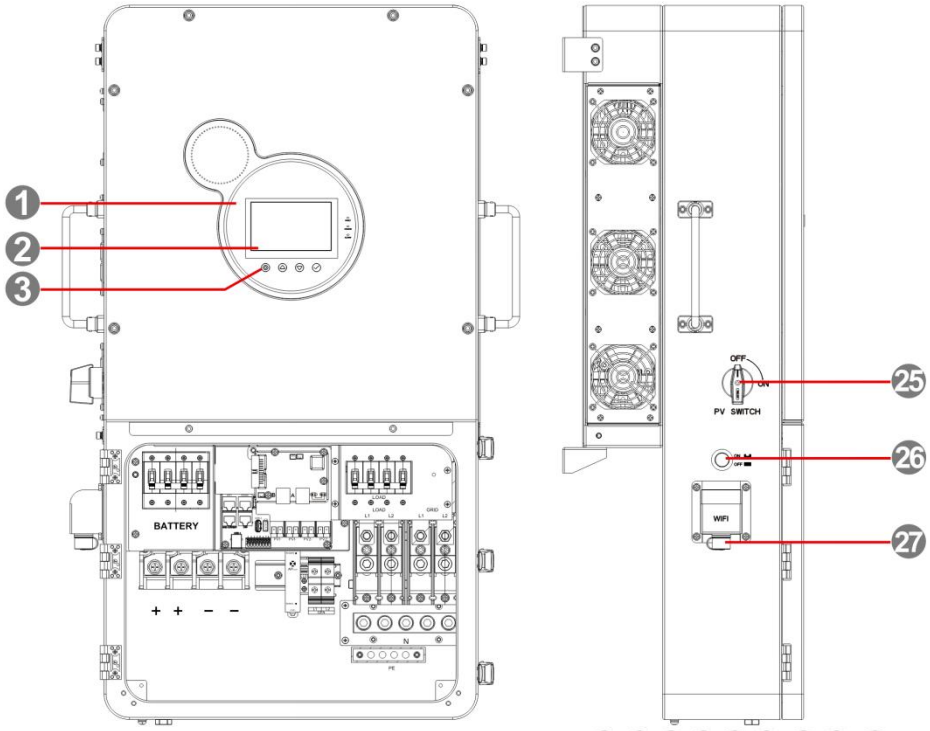

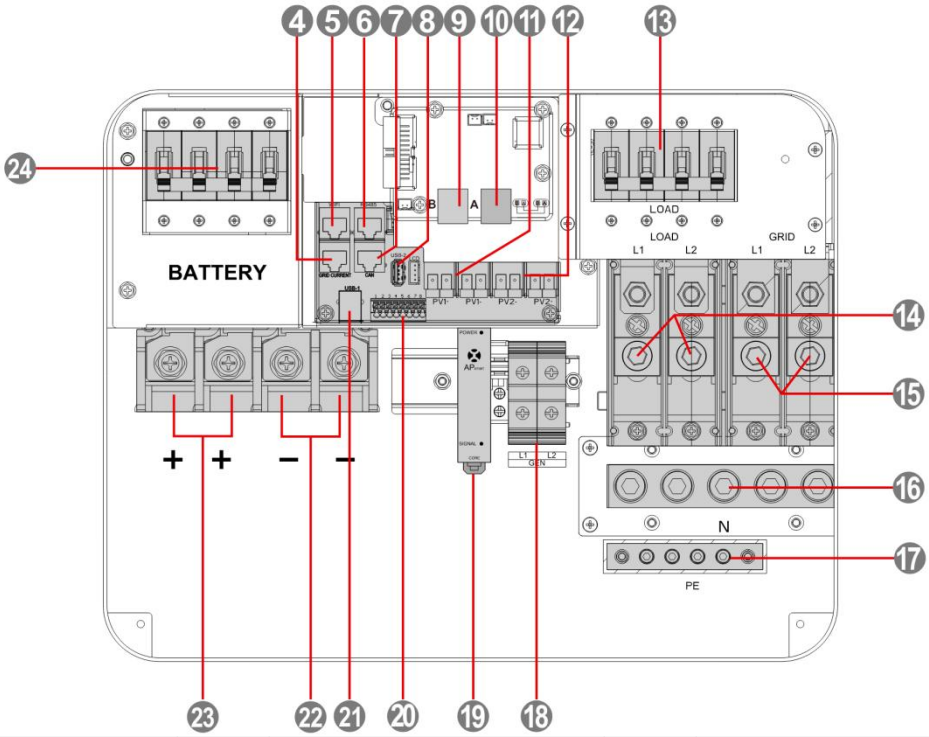

1	LED Indicator Light	2	LCD Screen	3	Physical Buttons
4	External CT Port	5	WiFi Port 1	6	BMS RS485 Port
7	BMS CAN Port	8	USB-2 Port	9	Parallel Port B
10	Parallel Port A	11	PV1 Port	12	PV2 Port
13	Load Breaker	14	Load Port (L1+L2)	15	Grid Port (L1+L2)
16	Neutral Busbar	17	Grounding Busbar	18	Generator Port (L1+L2)
19	Transmitter-PLC device for RSD	20	Dry Contact	21	USB-1 Port
22	Battery Negative	23	Battery Positive	24	Battery Circuit Breaker
25	PV Switch	26	ON/OFF Switch	27	WiFi Port 2

2.4 Dimension Diagram

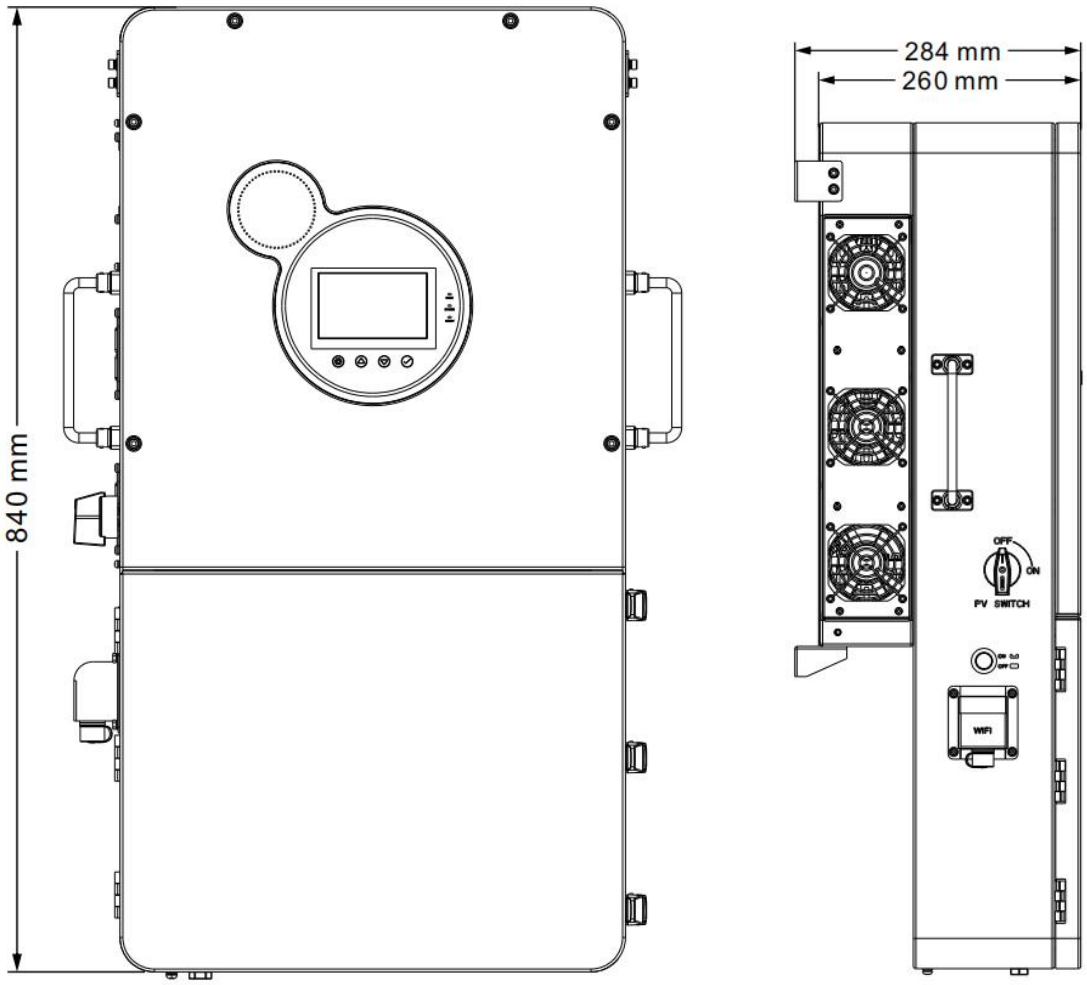

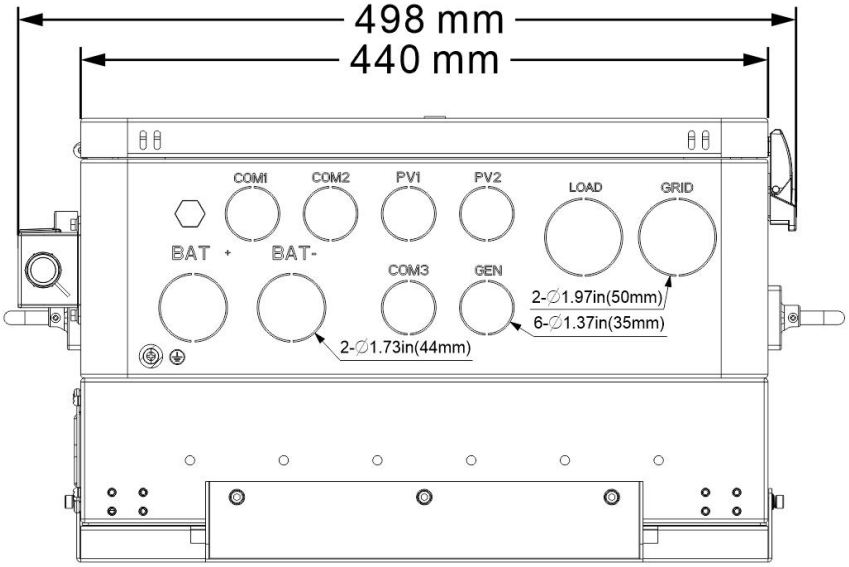

3. Installation

3.1 Installation Location Selection

HEBP series can be used outdoors (protection class IP65). Please consider the followings before selecting the location：

- Choose the solid wall to install the inverter.
- Mount the inverter at eye leve.
- Adequate heat dissipation space must be provided for the inverter.
- Installation location is a cool and ventilated place, under the photovoltaic panels or under the eaves, do not direct sunlight exposure.

The ambient temperature should be between-25~60℃ (-13~140℉) to ensure optimal operation.

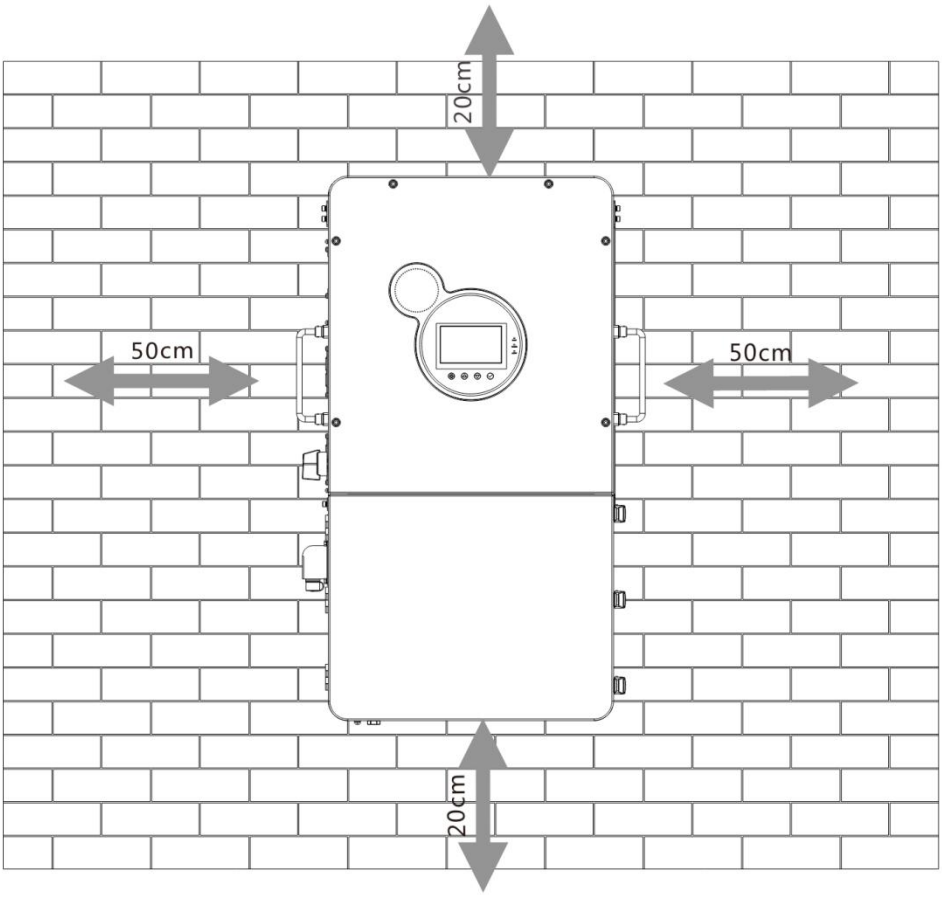

DANGER

- Do not install the inverter where highly flammable materials are near by.
- Do not install the inverter in potential explosive areas.
- Do not install the inverter with lead-acid batteries in a confined space.

CAUTION

- Do not install the inverter in direct sunlight.
- Do not install or use the inverter in a humid environment.

3.2 Pack List

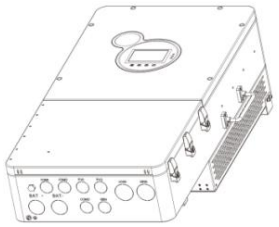

Inverter
x 1pcs

Wall hanger
x 1pcs

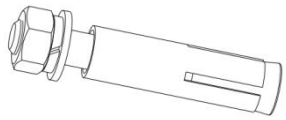

M8×60 expansion bolts
x 4pcs

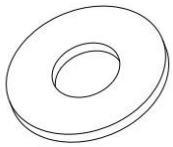

M8 Flat gasket (Backup)
x 5pcs

SC70-8
x 4pcs

4mm,5mm,8mm
Hex head screwdriver
x 3pcs

M8 Socket screwdriver
x 1pcs

M5*18mm screw
(backup)
x 1pcs

M5*12mm screw
x 4pcs

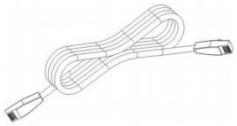

Parallel communication
cable
x 1pcs

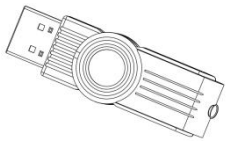

USB flash disk
x 1pcs

keys
x 3pcs

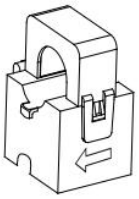

CT
x 2pcs

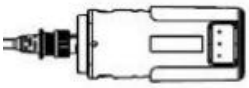

WIFI logger
x 1pcs

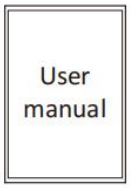

User manual
x 1pcs

The warranty card
x 1pcs

Quality Certificate
x 1pcs

Outgoing inspection
report
x 1pcs

3.3 Tool Preparation

NO.	Picture	Description/Function
1		Hammer drill, recommend drill dia. 10mm Used to drill holes on the wall.
2	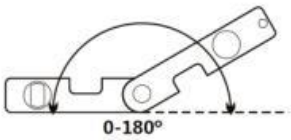	Spirit level Used to ensure that the Wall hanger is properly installed.
3	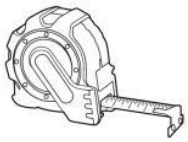	Measuring tape Used to measure distances.
4		Marker Used to mark signs.
5	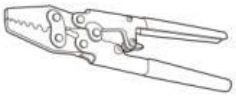	Crimping tool Used to crimp power cables.
6	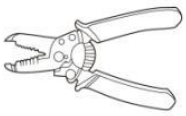	Wire stripper Strip wire
7	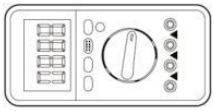	Multi-meter Used to check grounding.
8		Cross screwdriver Remove and install GEN terminal screws.
9		Hammer Used to hammer expansion bolts into holes.

3.4 Mounting the Inverter

- **Step1:** Determine the positions for drilling holes,ensure the position of holes are level,then mark them with a marker pen,use the hammer drill to drill holes on the wall.Keep the hammer drill perpendicular to the wall,do not shake when drilling, so as not to damage the wall.If the error of the hole is too big,you need to reposition.
- **Step2:** Insert M8*60 expansion bolt vertically into the hole an d pay attention to the insertion depth of the expanding bolt(should be deep enough)
- **Step3:** Align the wall hanger with the position of holes,fix the wall hanger on the wall by tightening the expansion bolt with nuts.
- **Step4:** Hang the inverter on the wall hanger first,and then fix the inverter and the wall hanger with M5 hexagon socket screws.

Step1

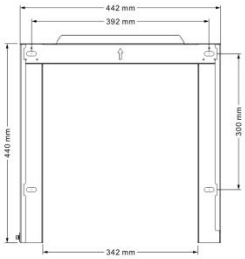

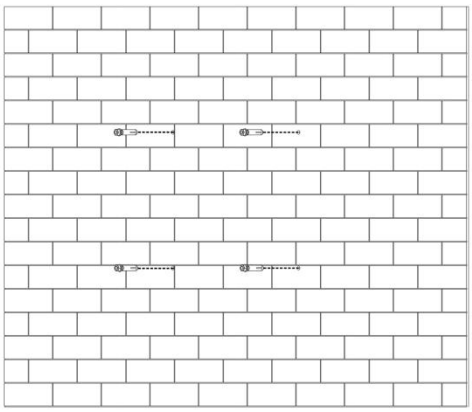

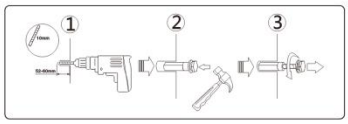

Step2

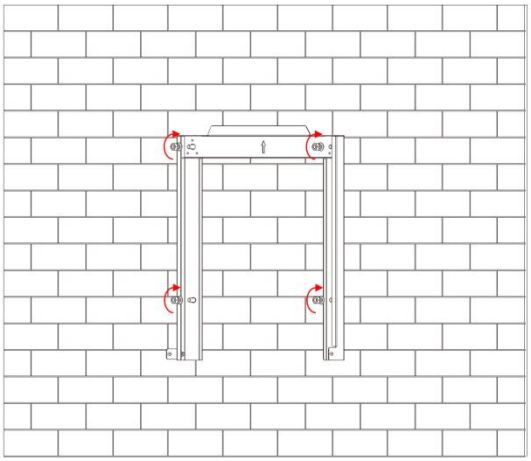

Step3

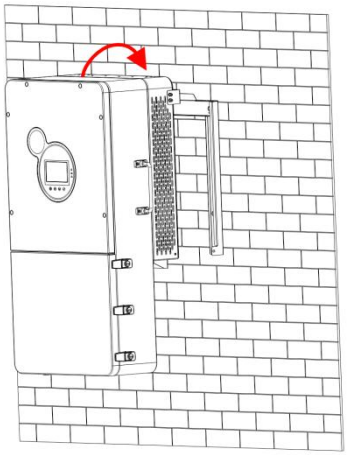

Step4

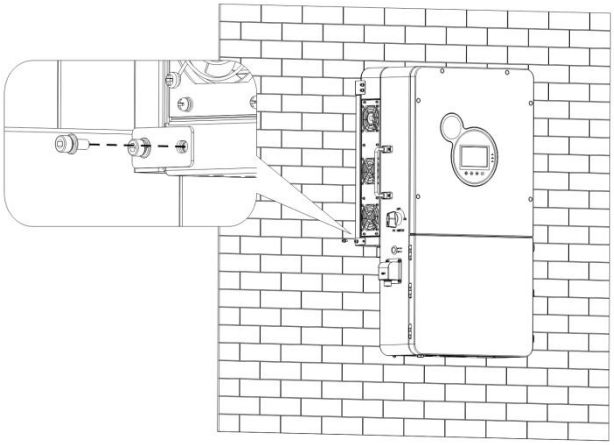

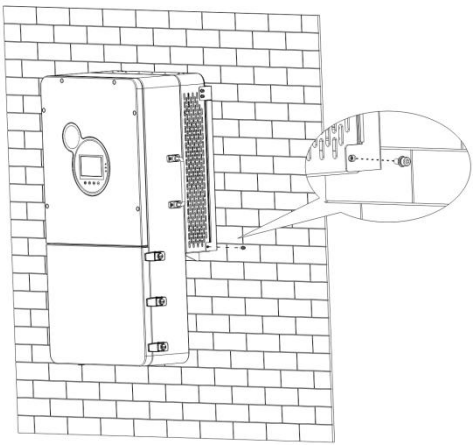

4. Connection Instructions

4.1 GRID & LOAD Connection

All wiring must be performed by a qualified personnal. It is very important for system safety and efficient operation to use appropritate cable for AC input connection.To reduce risk of injury, please use the proper recommended cable as below.

Model	Cable Diameter	Circuit Breaker Spec	Torque
8.8/10/12KW	70mm²/ 0～000AWG (L1/L2/N)	3P-200A	13N.M

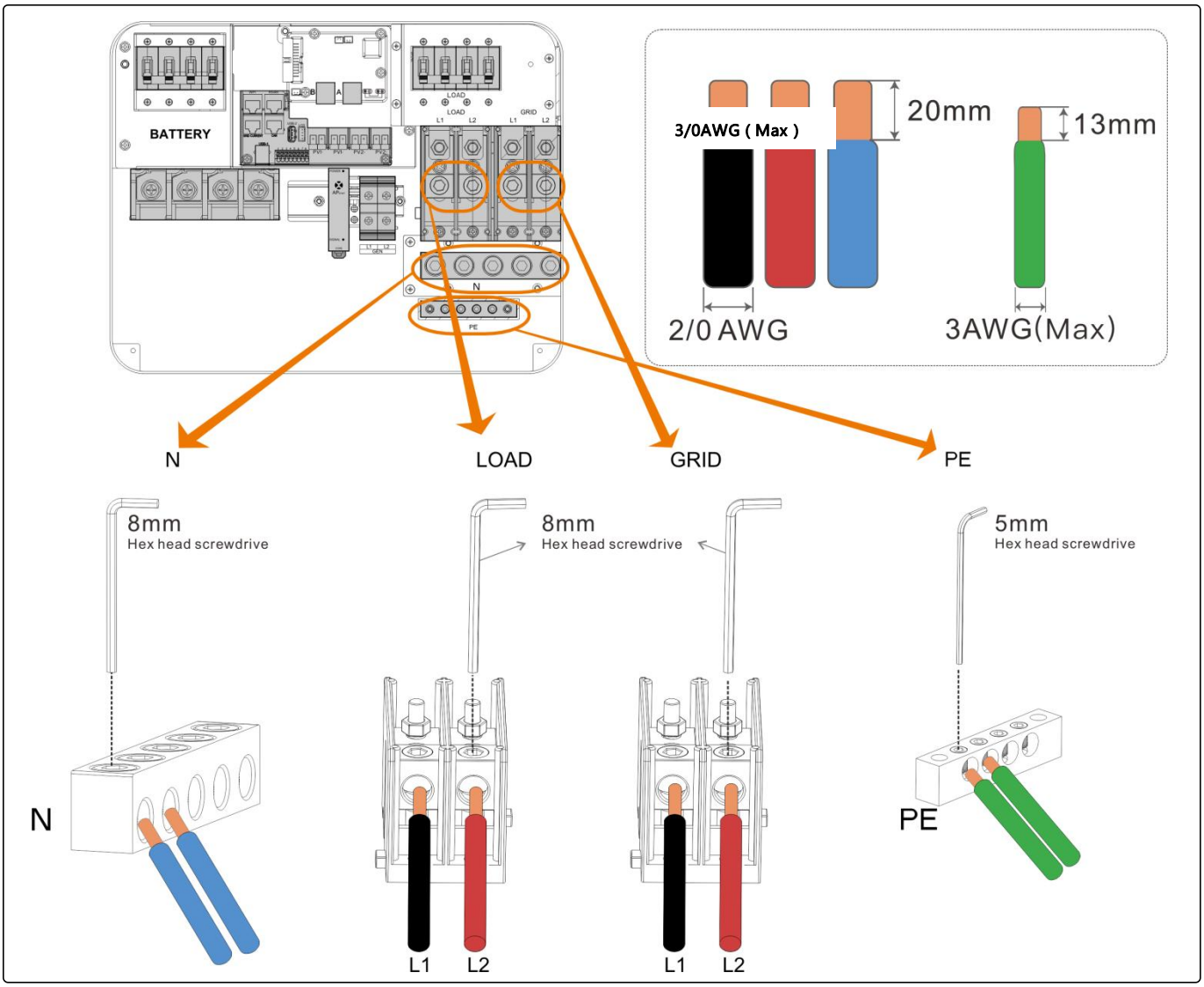

DANGER

- Before connecting AC input and output, the circuit breaker must be turned off to avoid electric shock hazards, and never operate with electricity.
- Please check that the cable used is sufficient for the requirements, too thin, poor quality cables are a serious safety hazard.

4.2 Generator Connection

Model	Cable Diameter	Circuit Breaker Spec	Torque
8.8/10/12KW	27mm²/3AWG (L1/L2/N)	3P-200A	13N.M

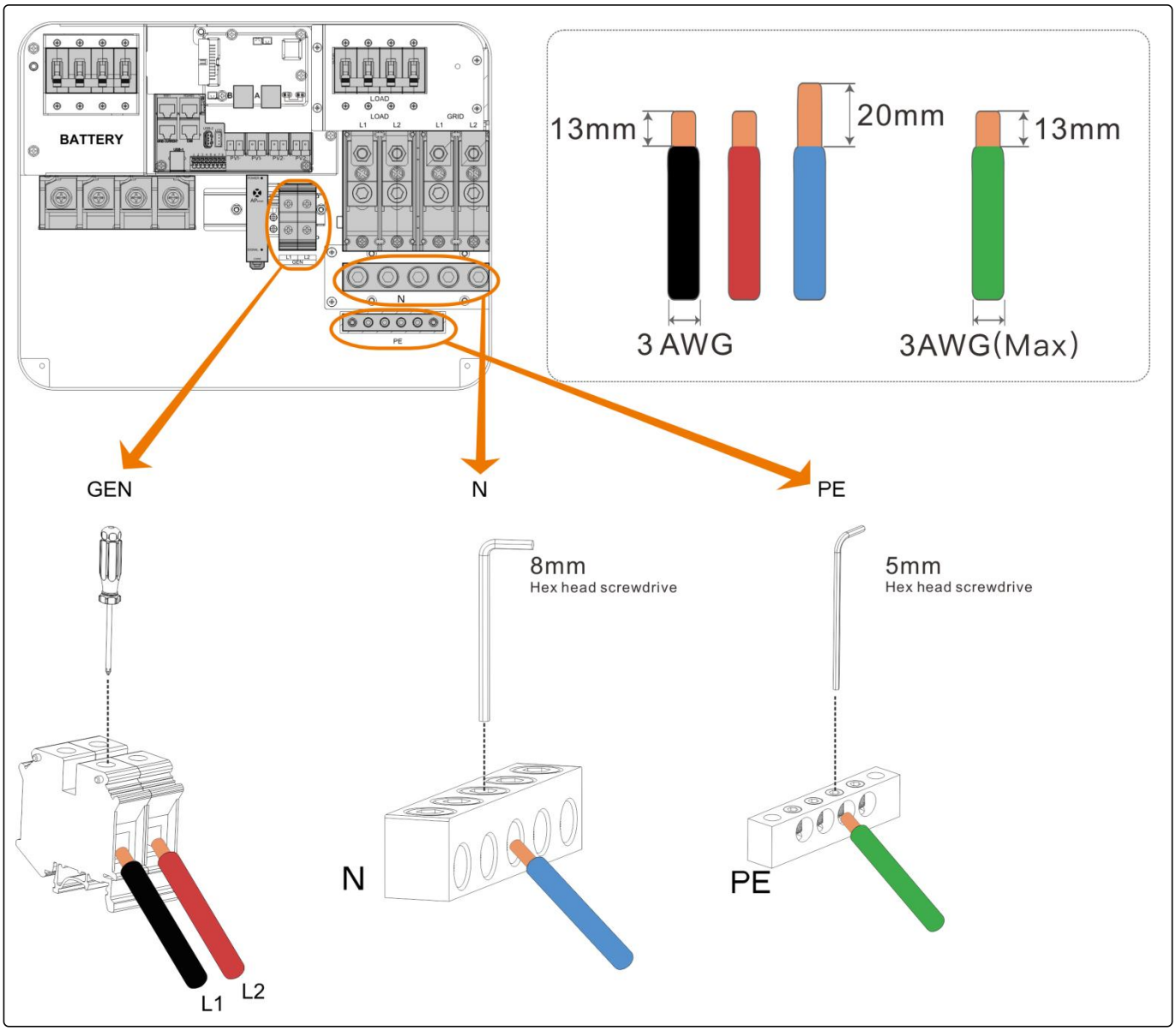

4.3 Battery Connection

Connect the positive and negative cable of the battery according to the diagram below.

Model	Port	Terminal Rating	Cable Diameter	Torque
8.8/10/12KW	Battery port A	200A	70mm²/ 00 AWG	5.5N.M
	Battery port B	200A	70mm²/ 00 AWG	

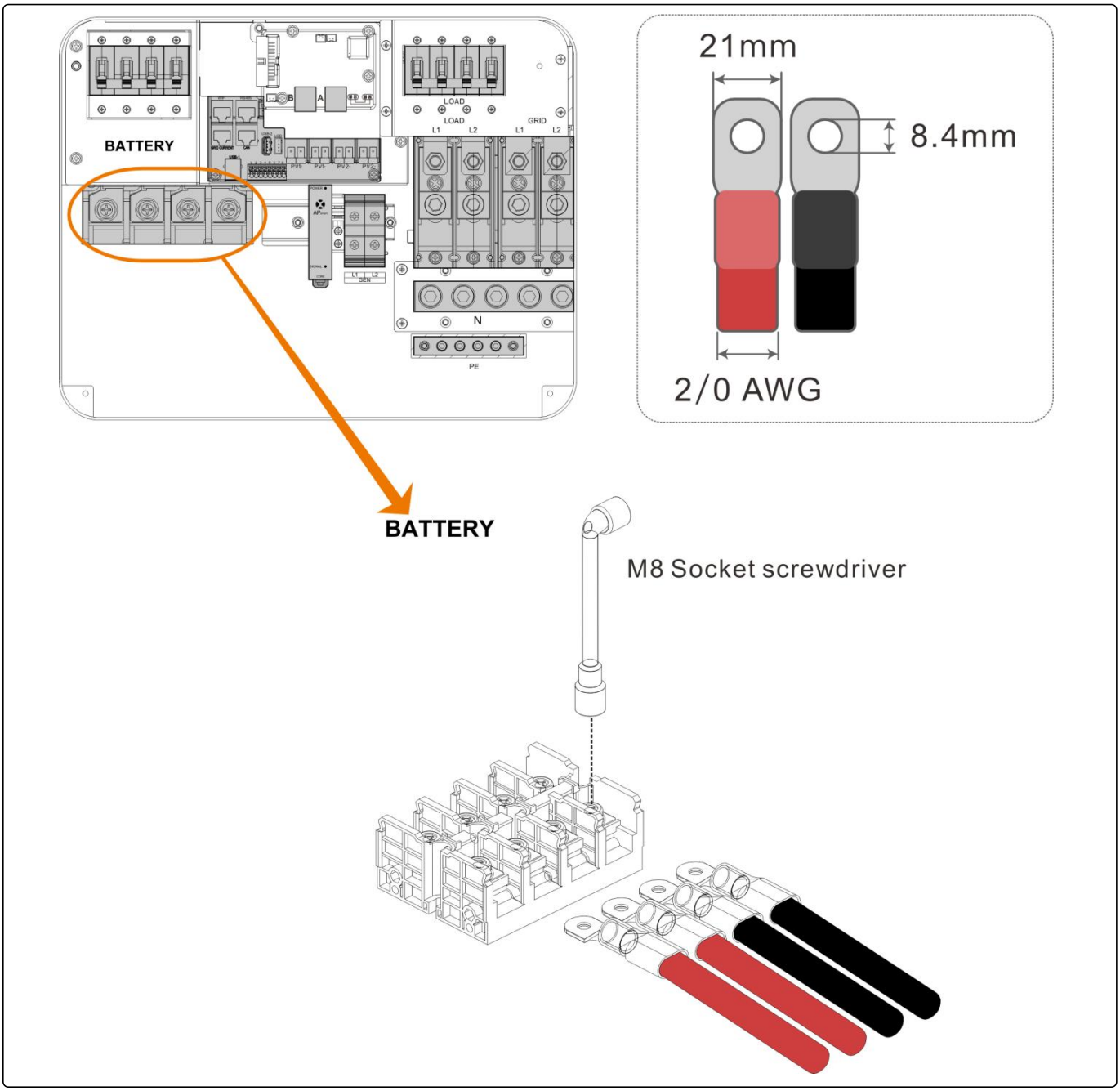

DANGER

- Before connecting Battery, the circuit breaker must be turned off to avoid electric shock hazards, and never operate with electricity.
- Ensure that the positive and negative ports of battery are connected correctly and not reversed,otherwise the inverter may be damaged.
- Please check that the cable used is sufficient for the requirements, too thin, poor quality cables are a serious safety hazard.

The two battery input terminals of this inverter will parallel batteries internally to ensure a commom connection between battery banks and simplify battery installations.
If charger/discharger rate of 200A is needed,the batteries must be connected to both input terminals.
If using 3or more batteries,use external busbar for (+) and (-)connection.

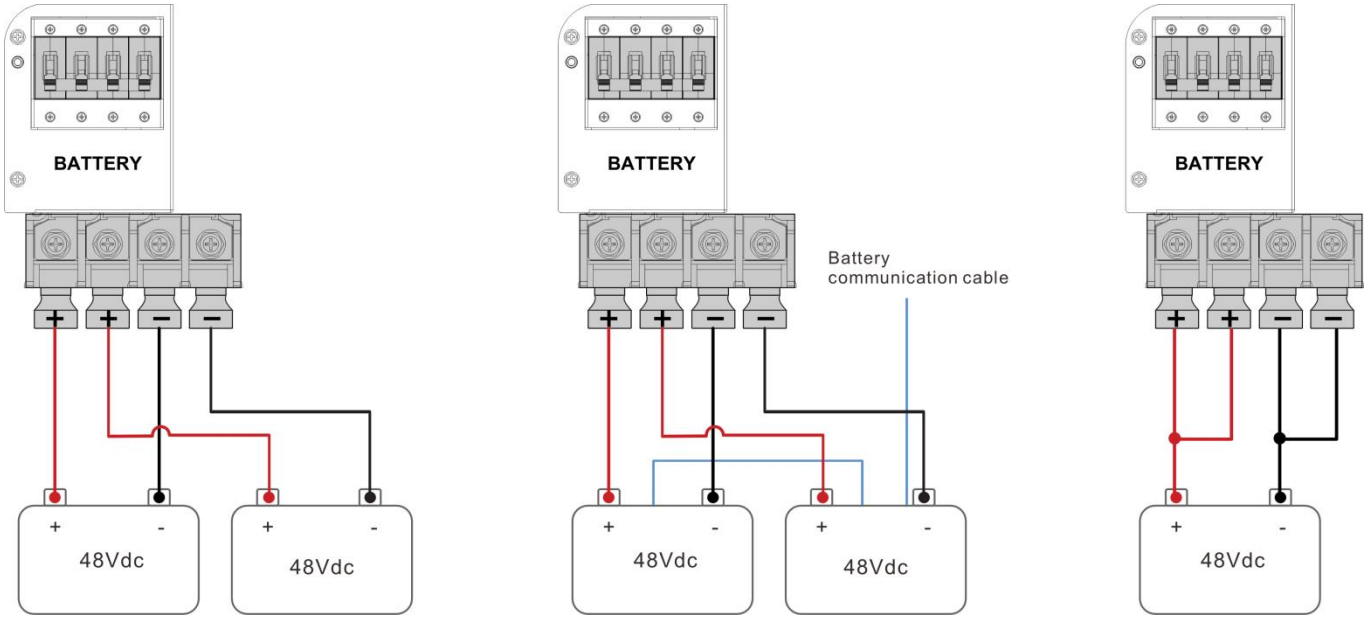

4.4 PV Connection

DANGER

- Before connecting PV , the circuit breaker must be opened to avoid the risk of electic shock and must not be operated with electricity.
- Ensure that the positive and negative ports of battery are connected correctly and not reversed,otherwise the inverter may be damaged.
- Ensure that the open-circuit voltage of the PV modules connected in series does not exceed the maximum open-circuit voltage of the inverter (the value is 550V), otherwise the inverter may be damaged.

Please follow below steps to implement PV module connection:

1.Remove 5-10 mm of insulation from the positive and negative wires.
2.Suggest to put bootlace ferrules on the end of positive and negative wires with a proper crimping tool.
3.Check correct polarity of wire connection from PV modules and PV input connectors. Then, connect positive pole (+) of connection wire to positive pole (+) of PV input connector. Connect negative pole (-) of connection wire to negative pole(-)of PV input connector. Close the switch and make sure the wires are tightly fixed.

Model	Cable Diameter	Max. PV Input Current
8.8/10/12KW	6mm²/ 10 AWG	32A

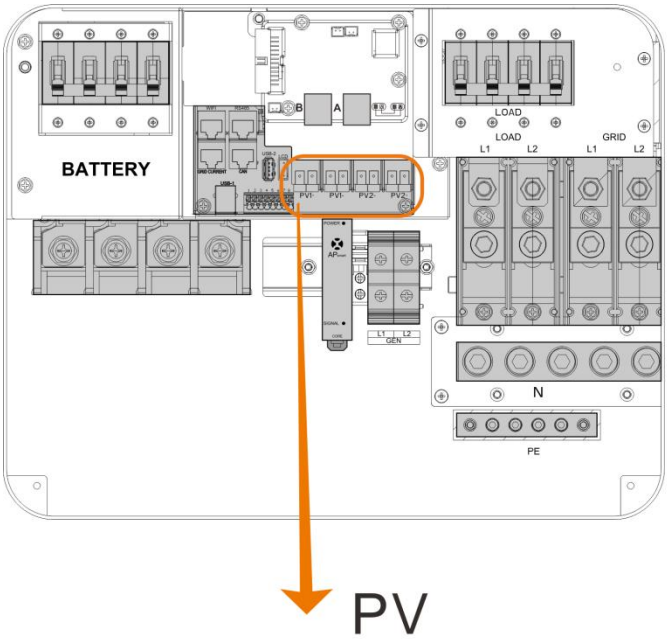

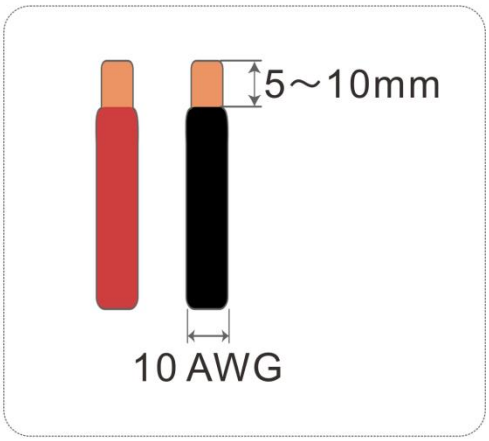

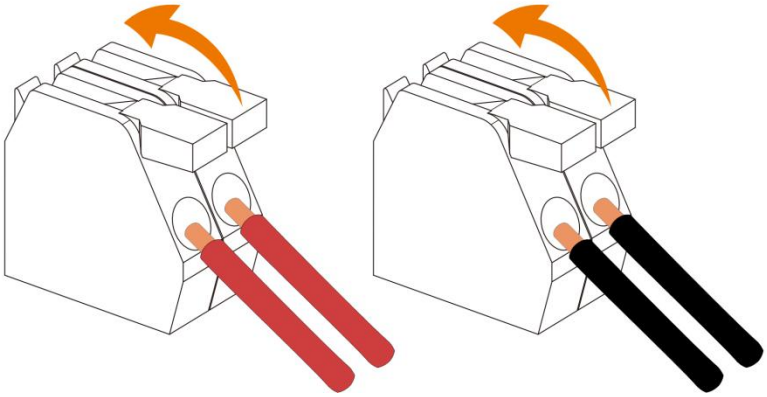

Connect solar panel strings using either of the following configurations :

"Y" connection

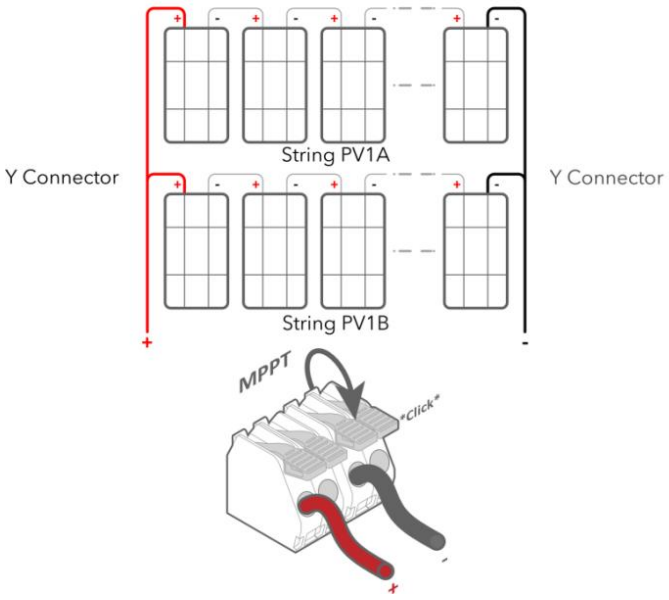

Individual strings

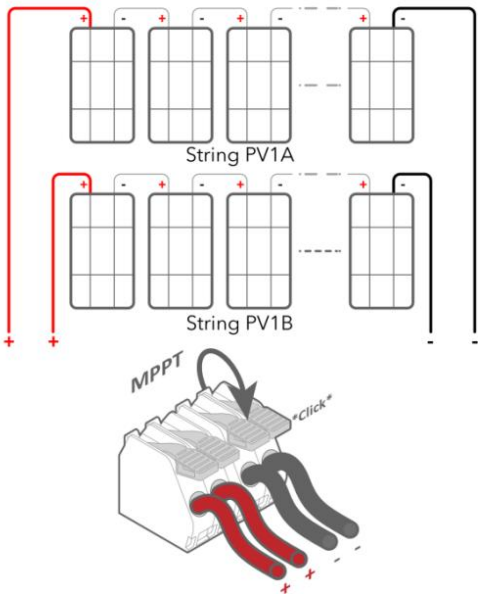

Transmitter-PLC Device

Rapid Shutdown Recommend RSD-D.
The APsmart Rapid Shutdown System Transmitter-PLC is part of a rapid shutdown solution when paired with APsmart RSD-D, a PV module rapid shutdown unit. While powered on, the Transmitter-PLC sends a signal to the RSD-D units to keep their PV modules connected and supplying energy. RSD-D units automatically enter rapid shutdown mode when the Transmitter-PLC is switched off and resume energy production when power is restored to the Transmitter-PLC.

Note: In case of an emergency, when it is necessary to disconnect the RSD power supply (Rapid Shutdown Signal Generator), the PV switch, AC switch, and battery switch must be turned off, and the voltage of the PV wires should be reduced to <30V within 30 seconds. After the maintenance is completed and the system is confirmed to be normal, the PV switch, AC switch, and battery switch need to be restored, and the photovoltaic system will operate normally.

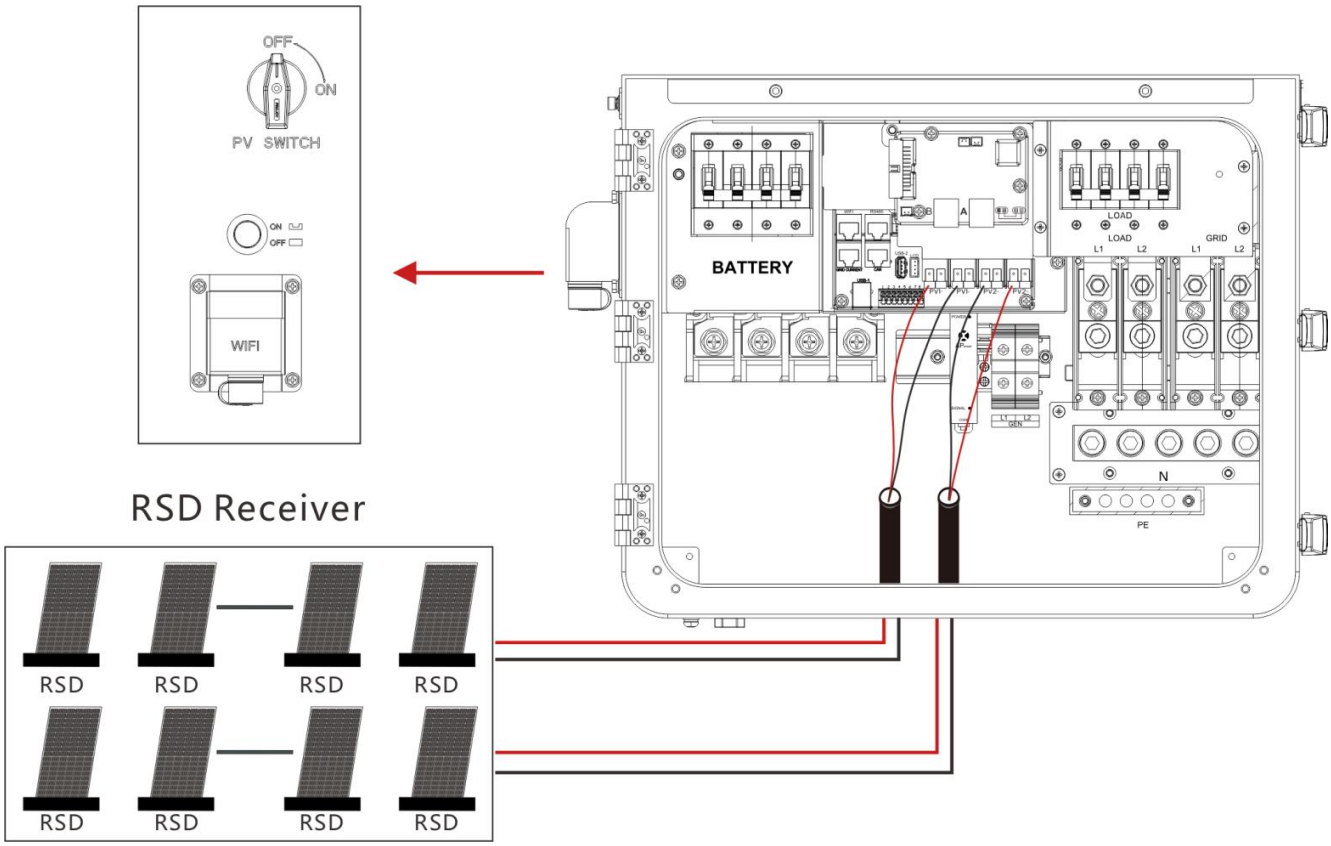

4.5 Dry Contact Connection

Use a small screwdriver to push back the direction indicated by the arrow, then insert the communication cable into the dry junction port.
(Communication cable diameter 0.2~1.5mm²)

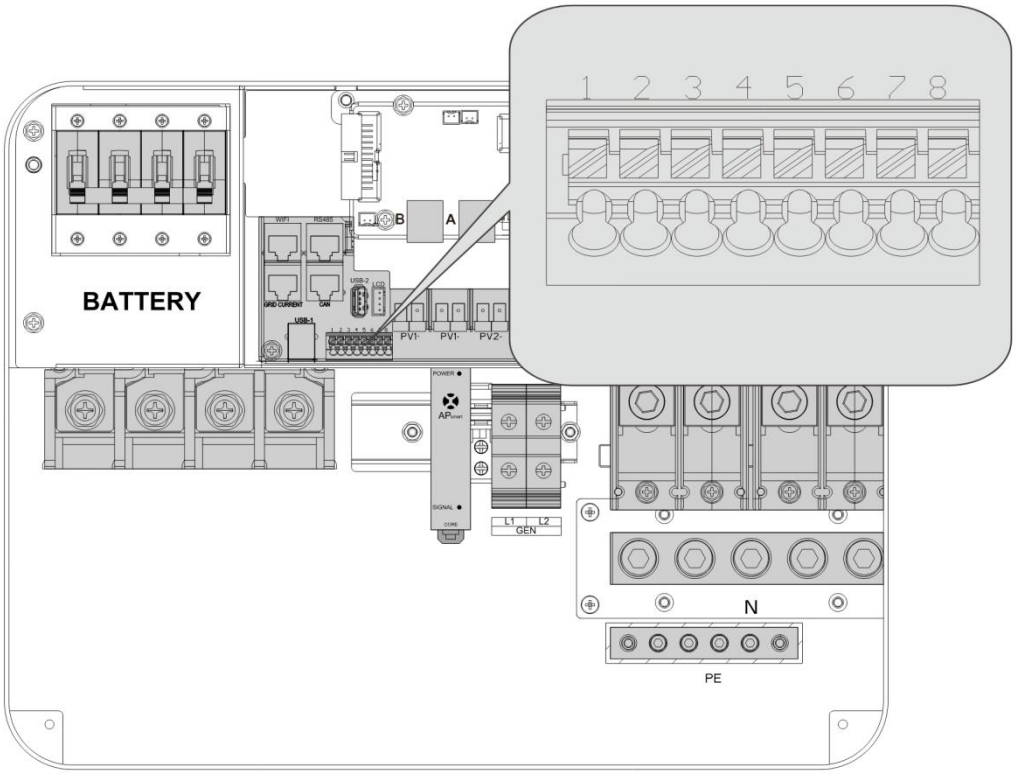

4.6 Grounding Connection

Please make sure the grounding terminal connect to the Grounding Bar.

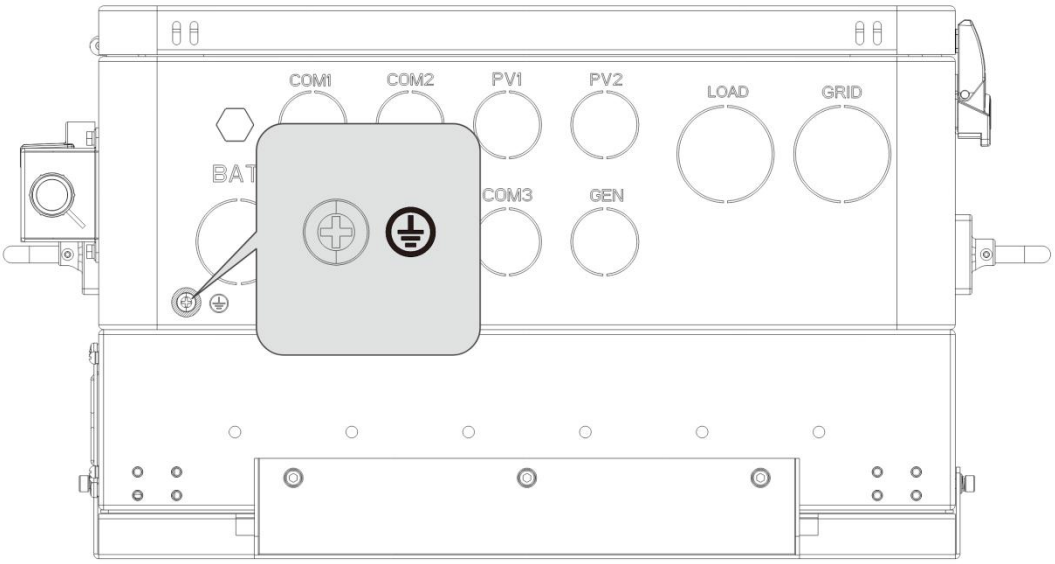

NOTICE

The grounding cable should have a diameter of not less than 4 mm² and be as close as possible to the grounding point.

5. Wiring Diagram

CAUTION

- Before and after connecting the system, please check the following system wiring diagrams in detail to ensure that all wiring is correct and reliable before powering on.
- After the system is wired, powered on and in normal operation, if a new inverter needs to be connected, make sure to disconnect the battery input, PV input, AC input and AC output, and that all solar storage inverters are powered off before reconnecting into the system.

5.1 Standard No-parallel Wiring Diagram

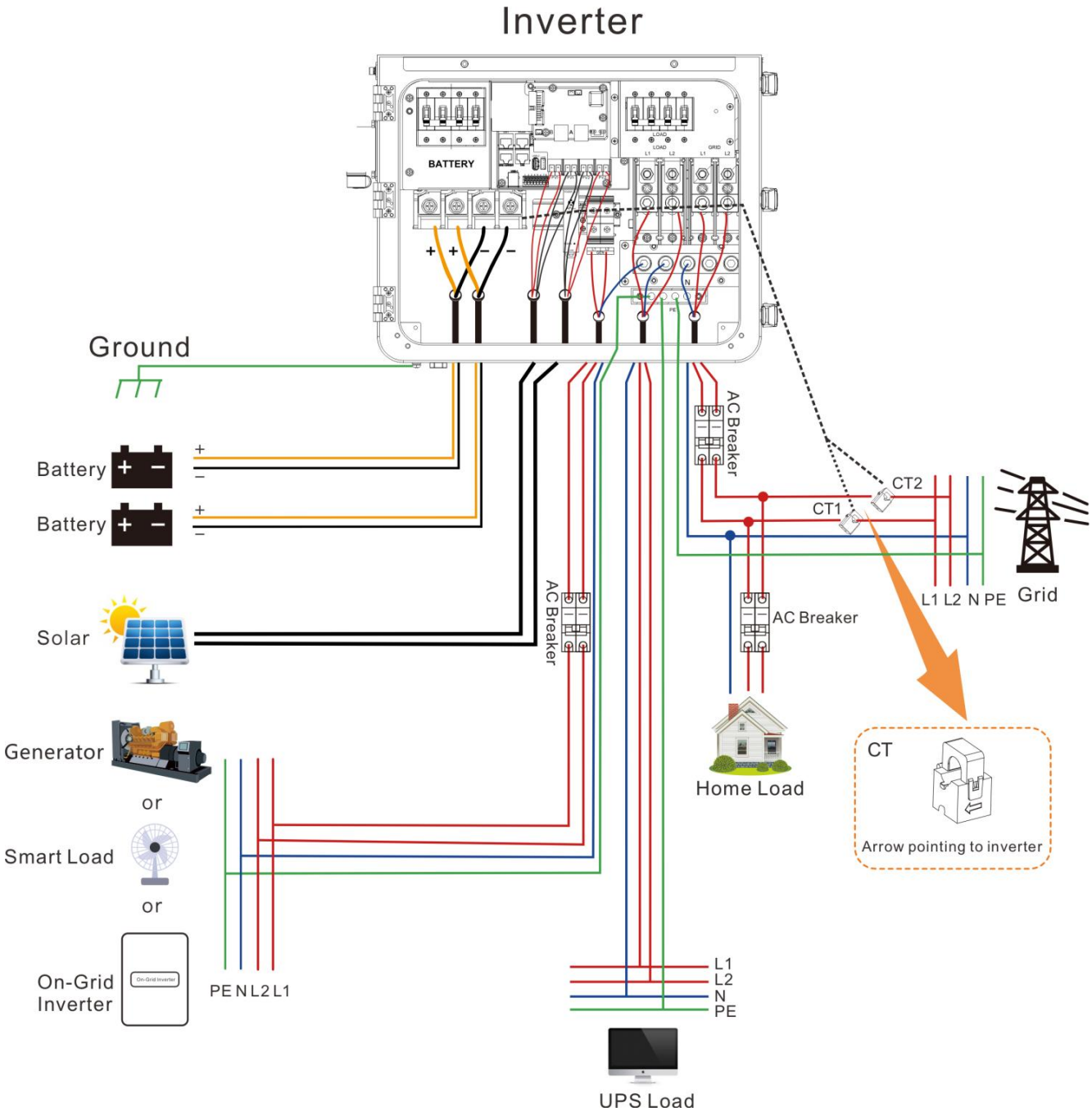

5.2 Split-phase Parallel Wiring

- **Setting for each inverter:**

Select "Parallel" for parallel mode, select "Split Phase" for grid type, when "120V" is selected for output phase voltage, the output L1-L2 voltage is 240V, L1-N voltage is 120V, L2-N voltage is 120V.

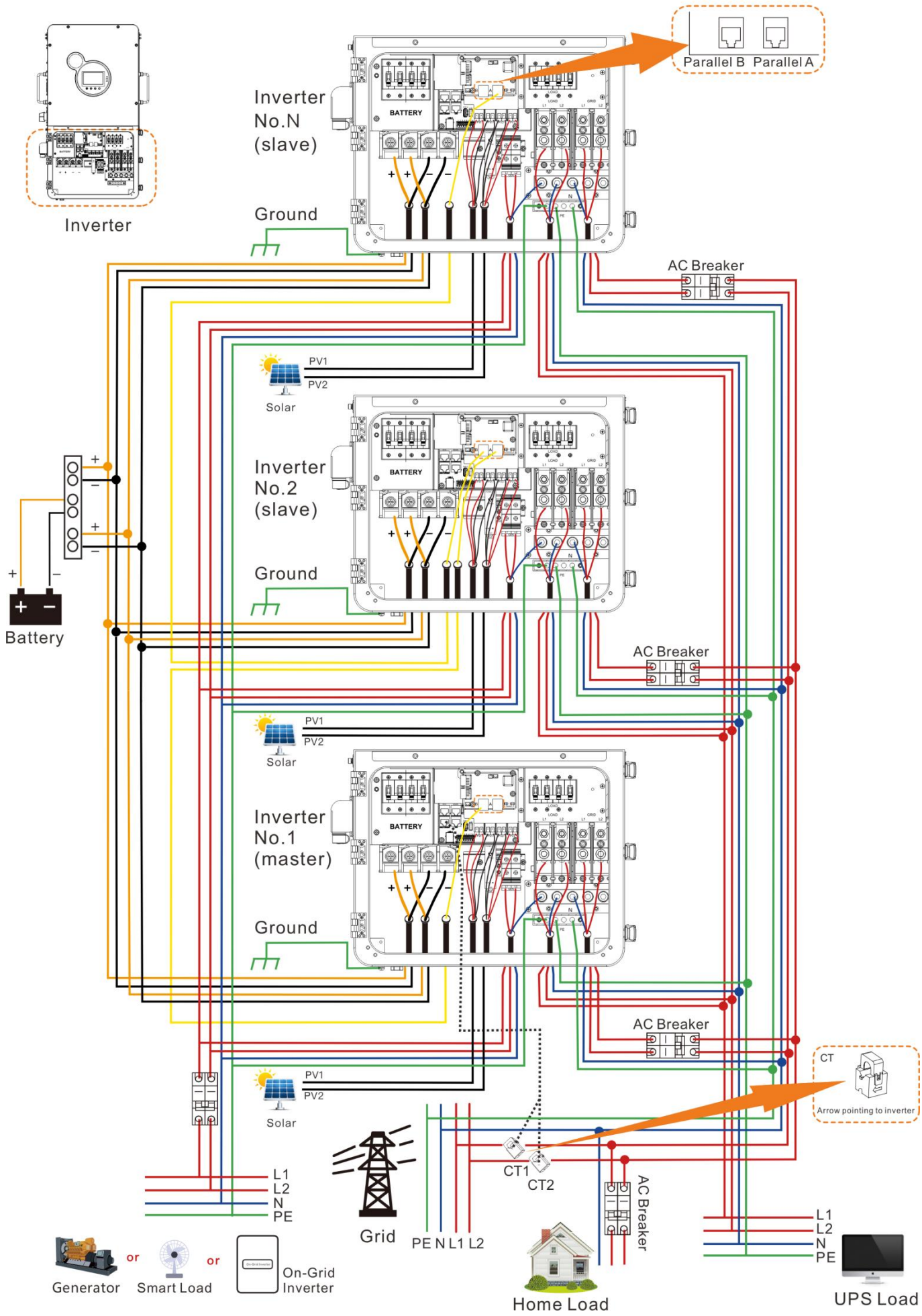
Communication wire
L wire
N wire
PE wire
Parallel B
Parallel A
Inverter
Inverter No.N (slave)
Ground
AC Breaker
PV1
PV2
Solar
Inverter No.2 (slave)
Ground
Battery
AC Breaker
PV1
PV2
Solar
Inverter No.1 (master)
Ground
AC Breaker
PV1
PV2
Solar
CT
Arrow pointing to inverter
L1
L2
N
PE
Grid
PE N L1 L2
CT1
CT2
AC Breaker
L1
L2
N
PE
Generator
or
Smart Load
or
On-Grid Inverter
Home Load
UPS Load

5.3 Three-phase Parallel Wiring

(1)Two inverters are connected in parallel for three-phase output (three-phase imbalance)

P1 machine setting: Parallel mode select "Three phase A", grid type select "Three Phase", when output phase voltage select "120V , the output L1-L2 voltage is 208V, L1-N voltage is 120V, L2-N voltage is 120V.

P2 machine setting: Parallel mode select "Three phase B", grid type select "Three Phase", when the output phase voltage select "120V", then the output L1-L2 voltage is 208V, L1-N voltage is 120V, L2-N voltage is 120V.

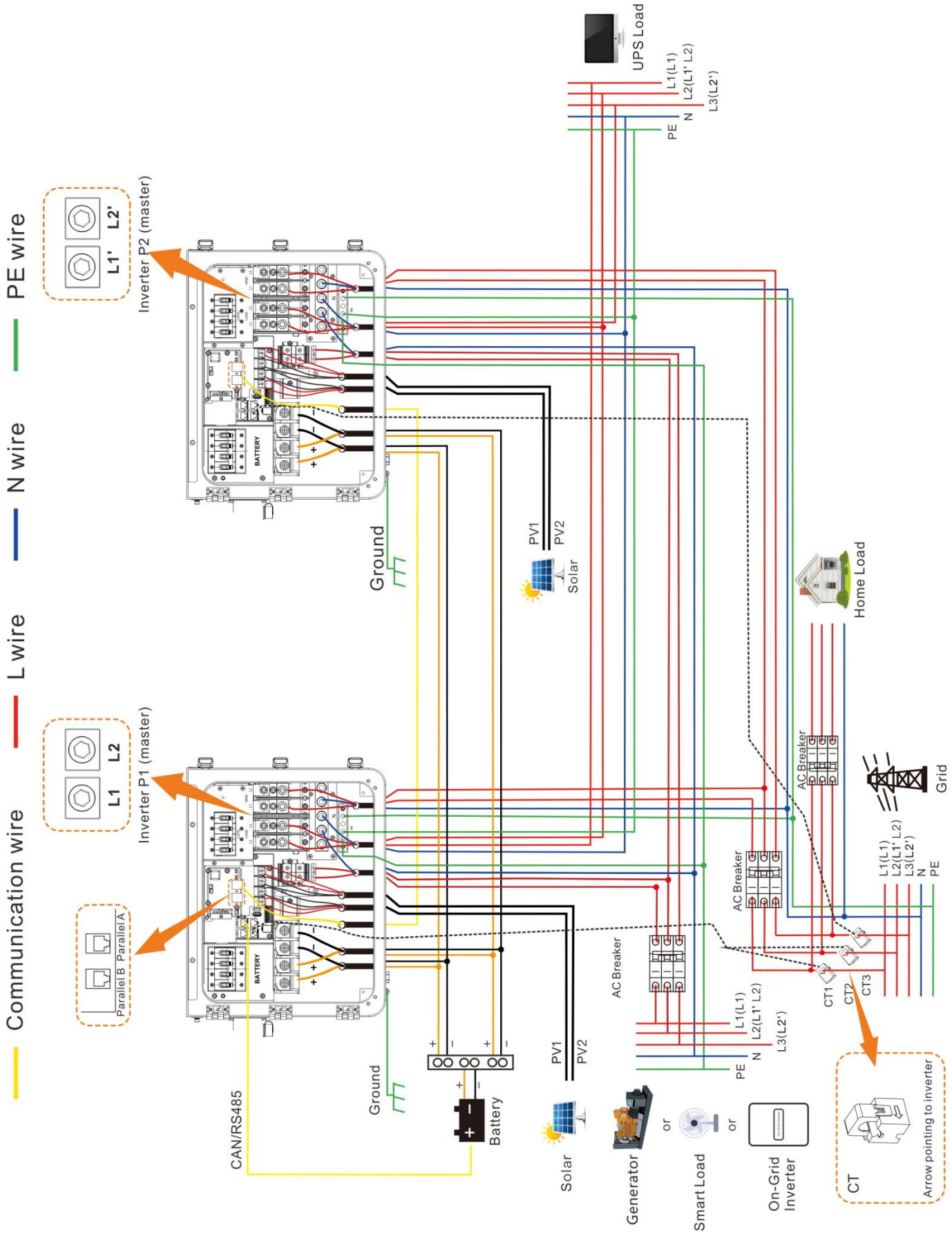
Communication wire
L wire
N wire
PE wire
L1
L2
L1'
L2'
Parallel B
Parallel A
Inverter P1 (master)
Inverter P2 (master)
BATTERY
CAN/RS485
Ground
Battery
PV1
PV2
Solar
Generator
or
Smart Load
On-Grid Inverter
AC Breaker
UPS Load
L1(L1)
L2(L1' L2)
L3(L2')
N
PE
Home Load
Grid
CT1
CT2
CT3
CT
Arrow pointing to inverter

(3)Three or six inverters are connected in parallel for three-phase output (three-phase balance)

P1 machine setting: Parallel mode select "Three phase A", grid type select "Three Phase", when output phase voltage select "120V , the output L1-L2 voltage is 208V, L1-N voltage is 120V, L2-N voltage is 120V.

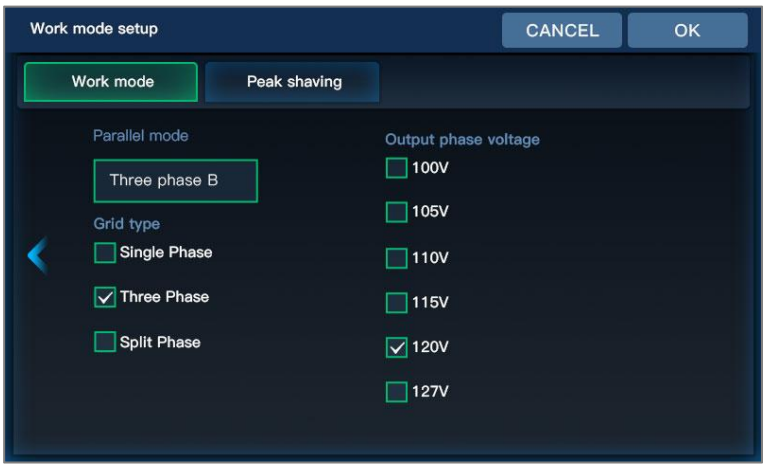

P2 machine setting: Parallel mode select "Three phase B", grid type select "Three Phase", when the output phase voltage select "120V", then the output L1-L2 voltage is 208V, L1-N voltage is 120V, L2-N voltage is 120V.

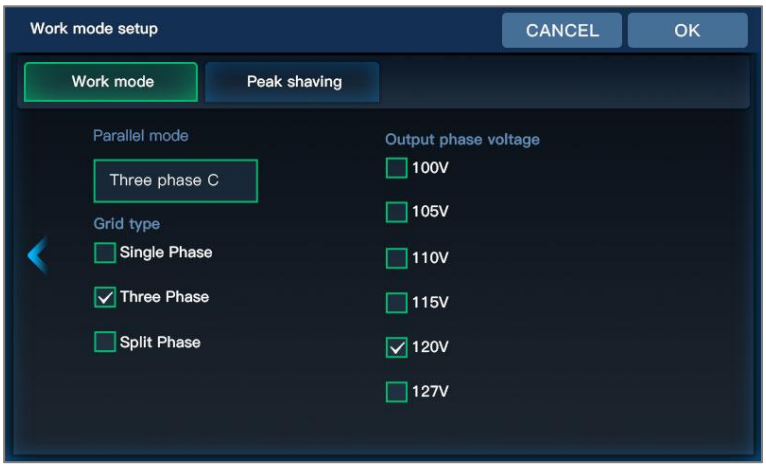

P3 machine setting: Parallel mode select "Three phase C", grid type select "Three Phase", when output phase voltage select "120V", then output L1-L2 voltage is 208V, L1-N voltage is 120V, L2-N voltage is 120V.

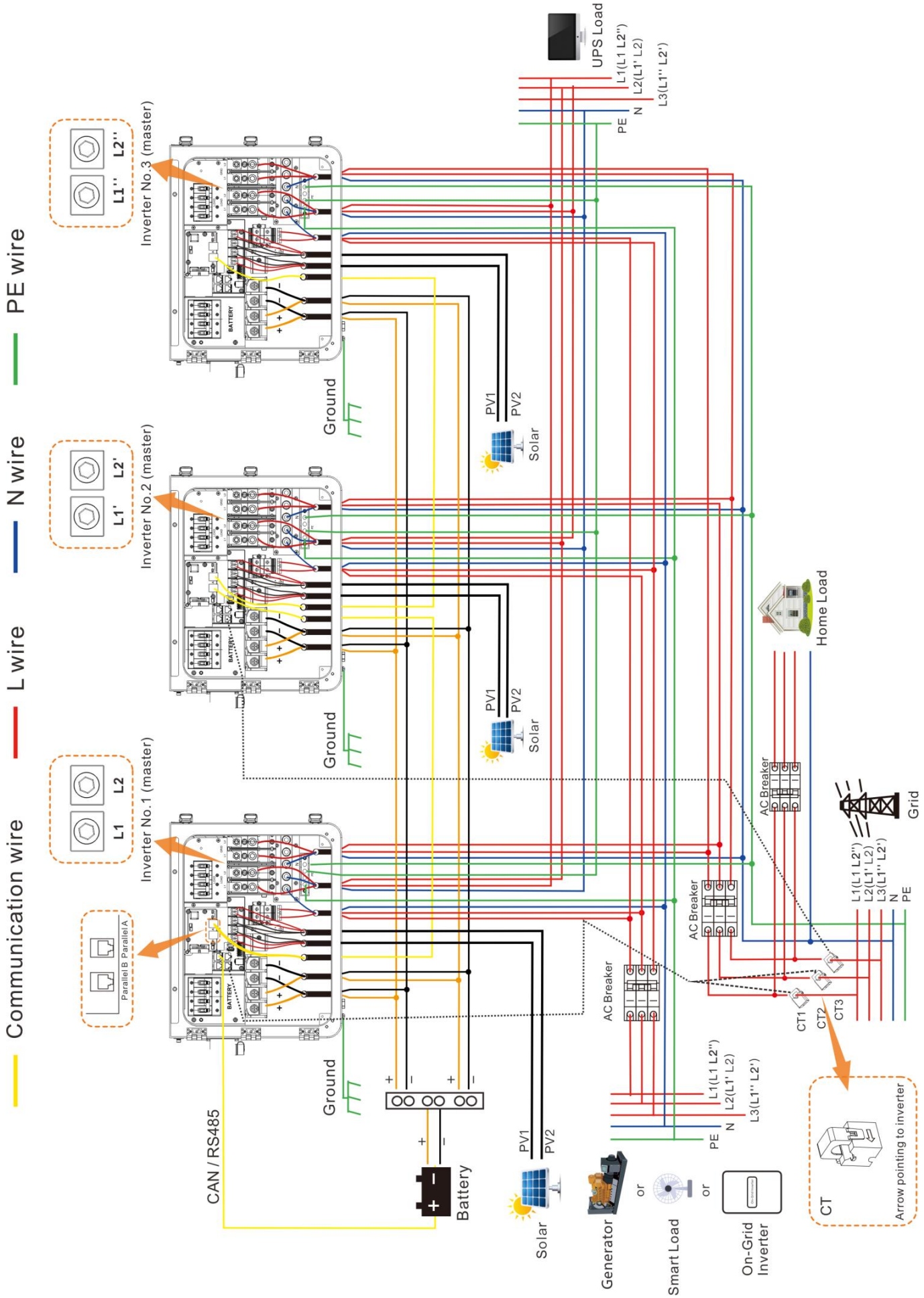
Communication wire
L wire
N wire
PE wire
Inverter No.1 (master)
Inverter No.2 (master)
Inverter No.3 (master)
L1
L2
L1'
L2'
L1''
L2''
Parallel B Parallel A
BATTERY
Ground
PV1
PV2
Solar
UPS Load
L1(L1 L2'')
L2(L1' L2)
L3(L1'' L2')
N
PE
Home Load
AC Breaker
Grid
CT1
CT2
CT3
CT
Arrow pointing to inverter
CAN / RS485
Battery
Generator
or
Smart Load
On-Grid Inverter

6. Operating Instructions

6.1 Operation Interface

The operation interface of the inverter includes 1 LCD display, 3 LED indicators, and 4 physical buttons.

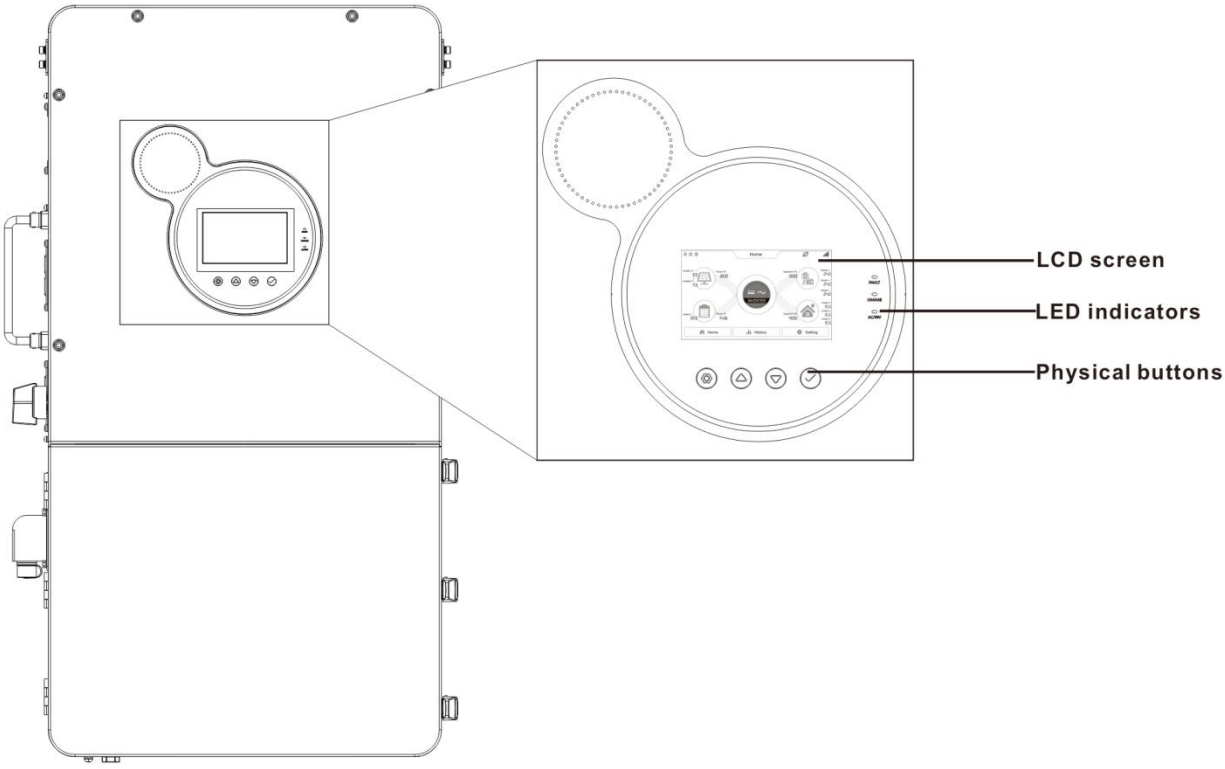

6.1.1 Physical Buttons

Buttons	Functional description
	Enter or exit the Settings screen
	Jump to previous page
	Jump to the next page
	Confirm or enter the selected options

6.1.2 LED Indicators

Indicator color	Function	Description
Red	FAULT	An alarm or fault event occurred
Green	CHARGE	Steady on: Charging is complete Blinking : Charging is underway
Yellow	AC/INV	Steady on: The grid output with load Blinking : The inverter output with load

6.1.3 LCD Screen

The main page displays elements:

Icon	Description	Icon	Description
	Solar panel		Load
	Battery		Grid or Generator
	Home page button		Inverter
	History data		Setting
0 :0 :0	Local time		The buzzer On/Off
	Indicates that the machine is currently in energy-saving mode		The energy direction
UPS	UPS load (connected to inverter load port)	**HOME**	HOME load (connected to grid port)

6.1.4 Real Time Data

6.1.4.1 System Information

Click the inverter icon on the LCD home screen to view the system information of the device. The following information is displayed:

System information			
1	device state	11	SN code
2	MCU1 software version	12	Compiled version
3	LCD version	13	Rated power
4	MCU2 software version	14	RS485 address
5	Custom id number	15	External temperature
6	Inverter temperature	16	MPPT temperature
7	Transformer temperature	17	Internal L1 phase voltage
8	Internal L1 phase current	18	Internal L2 phase voltage
9	Internal L1 phase current	19	Positive bus voltage
10	Negative bus voltage	20	Total bus voltage

6.1.4.2 Battery Information

Click the battery icon on the LCD home screen to view the battery information. The following information is displayed:

Battery information			
1	SOH (State of health)	6	SOC (Percentage of remaining battery capacity)
2	Battery voltage	7	Battery charging current
3	Battery power (Negative is charging, positive is discharging)	8	Battery discharging current
4	BMS communication protocol	9	Battery type
5	Battery charging state		

6.1.4.3 Photovoltaic Information

Click the solar panel icon on the LCD home screen to view the Photovoltaic information. The following information is displayed:

Photovoltaic information			
1	MPPT 1 output voltage	5	MPPT 1 output current
2	MPPT 1 output current	6	MPPT 2 output power
3	MPPT 1 output power	7	MPPT output total power
4	MPPT 2 output voltage		

6.1.4.4 Grid or Generator Information

Click the grid icon on the LCD home screen to view the grid or generator information.

The following information is displayed:

Grid or generator information			
1	L1 phase voltage	7	L2 phase voltage
2	L1 phase current	8	L2 phase current
3	L1 phase active power (Positive is to sell electricity, negative is to buy electricity)	9	L2 phase active power (Positive is to sell electricity, negative is to buy electricity)
4	L1 phase apparent power	10	L2 phase apparent power
5	Frequency	11	Charging current
6	Today is on-grid energy		

6.1.4.5 Load Information

Click the load icon on the LCD home screen to view the load information. The following information is displayed:

Load information			
1	L1 phase load voltage	7	L2 phase load voltage
2	L1 phase ups load current	8	L1 phase ups load current
3	L1 phase ups load active power	9	L2 phase ups load active power
4	L1 phase ups load apparent power	10	L2 phase ups load apparent power
5	Frequency	11	UPS load ratio
6	L1 phase home load active power	12	L2 phase home load active power

NOTICE

When the device is used in parallel, L1/L2 ups load active power may be less than 0, indicating that there is a small power circulation in the parallel system, which is related to the inconsistent wiring length of the device and the inconsistent photovoltaic power and other factors, and does not have much impact on the work of the entire parallel system.

6.1.5 Historical Information

Click the "History" icon at the bottom of the main page to view historical battery statistics and historical fault information.

6.1.5.1 Electricity statistics for the day

Today			
1	The amount of battery charge today	4	The load consumes electricity today
2	The amount of battery discharge today	5	The amount of charge from grid
3	Photovoltaic power generation today	6	The load consumes electricity from the grid Today

6.1.5.2 Last week's electricity statistics

Last week			
1	Photovoltaic power generation in the last 7 days	4	The amount of battery charge from grid in the last 7 days
2	The amount of battery charge in the last 7 days	5	The load consumes electricity in the last 7 days
3	The amount of battery discharge in the last 7 days	6	The load consumes electricity from the grid in the last 7 days

6.1.5.3 Accumulative electricity statistics

Accumulative			
1	Accumulative battery charge energy of the battery	5	Accumulative discharge energy of the battery
2	Total photovoltaic power generation	6	The total power consumed by the load
3	Total charging capacity from the grid	7	The total power consumed from grid by the load
4	Total on grid energy		

6.2 Parameter Setting

Click the "Settings" button in the menu bar below the main page to enter the Settings page, which contains five Settings: basic Settings, working mode Settings, battery Settings, grid-connected Settings and advanced Settings.

6.2.1 Basic Setting

6.2.1.1 Display Setting

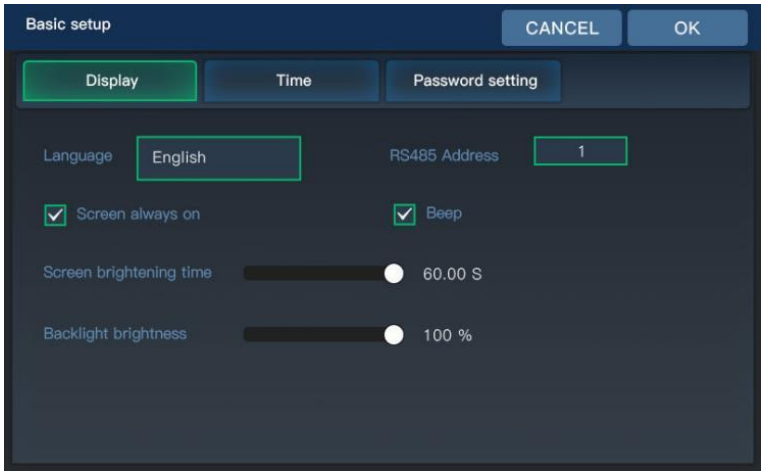

- **Language:** Select the language for the display.
- **RS485 Address:** Set the RS485 address for the inverter, range: 1-255.
- **Screen always on:** Choose whether the display screen should always remain on.
- **Beep:** Enable or disable the beep alarm sound.
- **Screen brightening time:** The delay time of screen backlight turns off.
- **Backlight brightness:** Percentage of screen backlight brightness.

6.2.1.2 Time Setting

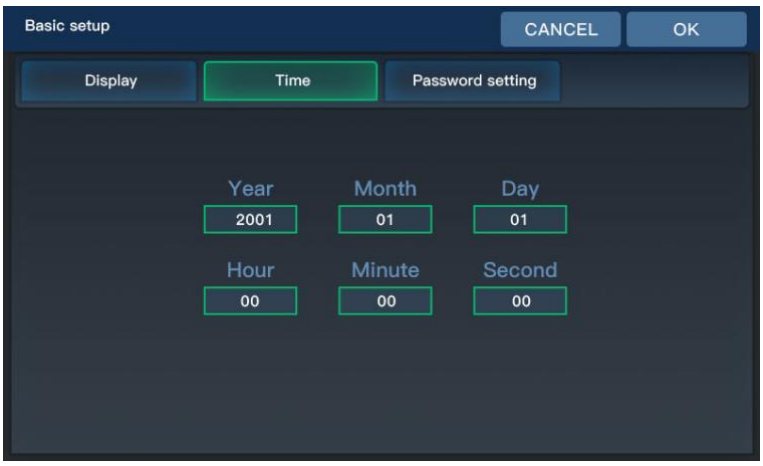

1.Click the number of Year\ Month\ Day\ Hour\ Minute\Second, then pop-up numeric keypad.
2.Enter the correct date and time.
3.Click the "OK" button.
4.After the setting is successful, "Configuration successful" is displayed, otherwise "Configuration unsuccessful" is displayed.

6.2.1.3 Password Setting

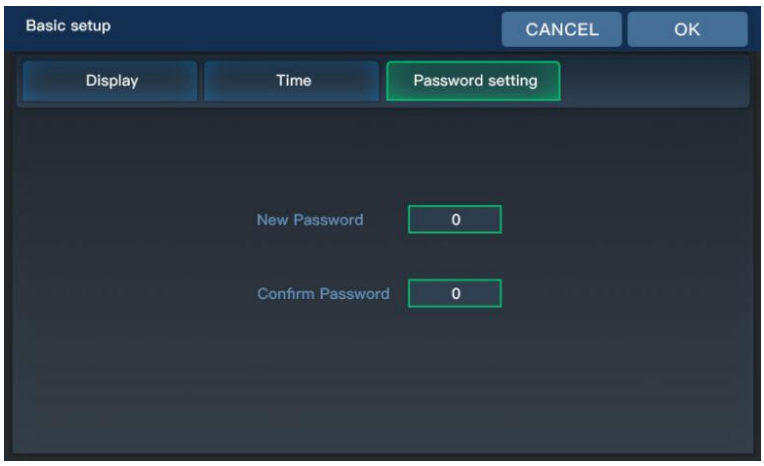

To enter the On-grid Settings and advanced Settings, you need to enter the password. The default password is "**4321**", the password setting value range is **0-9999**.

6.2.2 Operating Mode Setting

6.2.2.1 Basic mode of operation

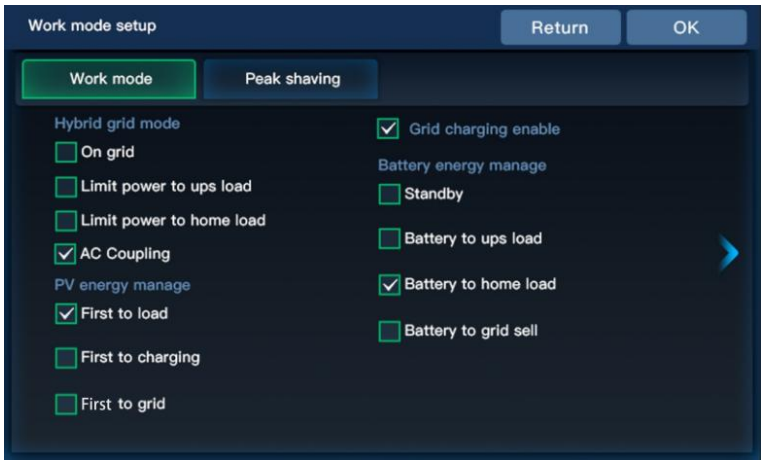

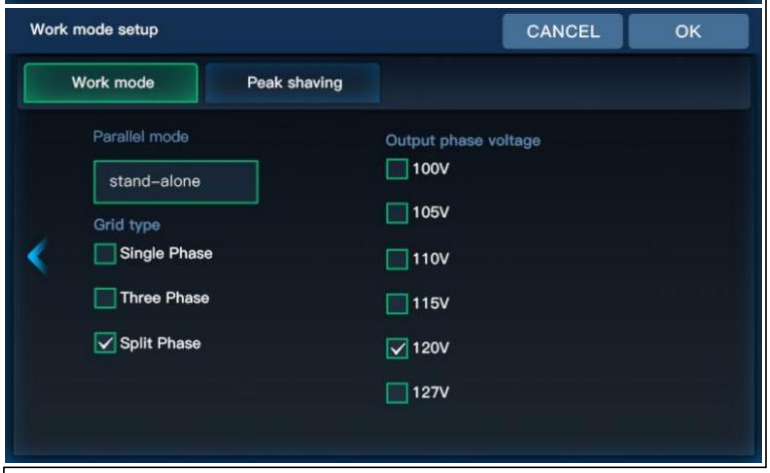

- **Hybrid grid mode:**

Select the device to work in grid-connected power generation mode or anti-flow mode.

① **"On grid"** means PV energy can be connected to the grid to sell electricity;
② **"limit to ups load"** means PV or battery power is only provided to the ups load, no electricity is sold;
③ **"limit to home load"** means PV or battery power is only provided to the ups load and home load, no electricity is sold;
④ **"AC coupling"** means the on-grid inverter connect to the hybrid inverter

Notice:

"UPS load" refers to the load connected to the "load" port of the device. "Home load" refers to the load connected to the "Grid" port side of the device.

- **PV energy manage:**

This parameter is used to select the priority of PV energy.

① **"First to load"** means that the photovoltaic energy is supplied to the load first, the battery is charged after the load power is satisfied, and the remaining power will be feed into grid.
② **"First to charging"** means that the photovoltaic energy is supplied to battery first, and then supplied to load after the charging power is satisfied, and the remaining power will be feed into grid.
③ **"First to grid"** means that the PV energy is preferentially supplied to the load, and then feed into the grid after meeting the load power, and finally the remaining power is used to charge the battery.

Notice:

When "Hybrid grid mode" is set to "limit power to ups load", the above "load" refers to the ups load.
When "Hybrid grid mode" is set to "limit power to home load" and CT function is enabled, the above "load" refers toUPS load and home load.

- **Grid charging enable:**

Choose whether to enable the grid charging function. If enabled, the PV function is charged preferentially and the grid power is used as a supplement.

- **Battery energy manage:** This parameter is used to select the battery discharge option.

① **"Standby"** means that the battery is not discharged in the hybrid mode, but only discharged in the off-grid mode.
② **"Battery to ups load"** means that the battery discharge power is only supplied to the ups load, and the discharge power is less than or equal to the ups load power.
③ **"Battery to home load"** means that the battery discharge power is only supplied to the ups load and Home load, and the discharge power is less than or equal to the ups load power + home load power.
④ **"Battery to grid sell"** means that the discharging power of the battery participates in the grid sell, and the discharging power is less than or equal to the ups load power + home load power + selling power.

Notice:
When the battery and PV supply the load at the same time, the PV power is preferred and the battery power is used as a supplement. When the battery and grid supplies the load at the same time, the battery power is given priority and the grid power is used as a supplement.

- **Grid type:** Select the AC wiring type. The device supports European standard single-phase, American standard three-phase and American standard split phase wiring.(Turn off the "ON/OFF" switch can be set)
  ① When **"single-phase"** is set, the default voltage of L1-L2 is 230V, L1 is connected to the Live wire, and L2 is connected to the Neutral wire.
  ② When **"three-phase"** is set, the phase voltage of L1 and L2 is 120V, the line voltage is 208V, and the phase difference between the L1 and L2 is 120°.
  ③ When **"split phase"** is set, the phase voltage of L1 and L2 is 120V, the line voltage is 240V, and the phase difference between the L1 and L2 is 180°.

Notice:
The wiring of the device must be the same as the wiring of the parameter setting.

- **Parallel mode:**
  This parameter is used to set the device parallel mode and is associated with the Grid type parameter. When the Grid type is set to "single phase" or "split phase", the parallel mode parameters can be selected as "stand-alone" or "parallel".
  When the AC wiring type is set to "three phases", the parallel mode parameters can be set to "Three phase A" or "Three phase B" or "Three phase C".
- **Output phase voltage:**
  Set the output voltage in the off-grid state, which refers to the phase voltage of L1-N and L2-N. The options you can set are: 100V,105V,110V, 115V,120V,127V.

6.2.2.2 Peak Shaving

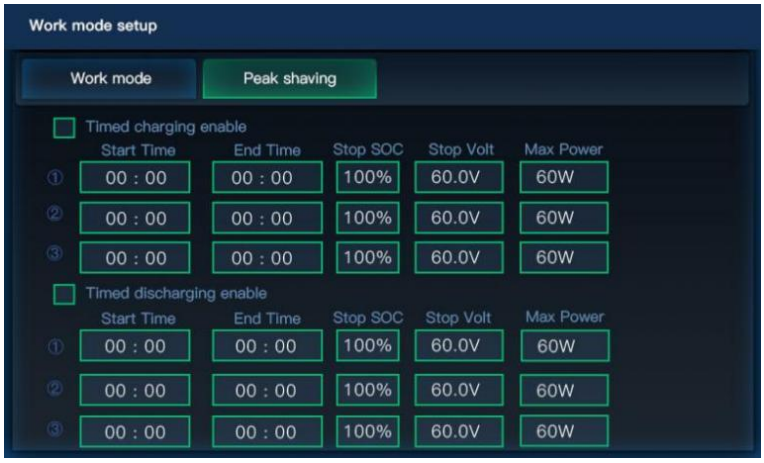

This series has a time-division charging and discharging function, and users can set different charging and discharging periods according to the local peak and valley electricity price, so that the grid and photovoltaic energy can be used reasonably.
① When the grid electricity price is expensive, the battery inverter is used to supply power to the load.
② When the grid electricity price is cheap, the grid electricity can be used to power and charge the load, which can help the

- **Timed charging enable:** Select whether to enable the timed charging feature.
- **Timed discharging enable:** Select whether to enable the timed discharging feature.
- **Start time:** Sets the start time of the timing period.
- **End time:** Sets the end time of the timing period.
- **Stop SOC:** Set the charge or discharge cut-off SOC in the timing period. This parameter is only valid if BMS communication is normal.
- **Stop Voltage:** Set the charge or discharge cut-off voltage in the timing period. This parameter is valid when there is no BMS communication.
- **Max. power:** Set the maximum charging or discharging power in the timing period.

Here is a case example to help you understand this feature:

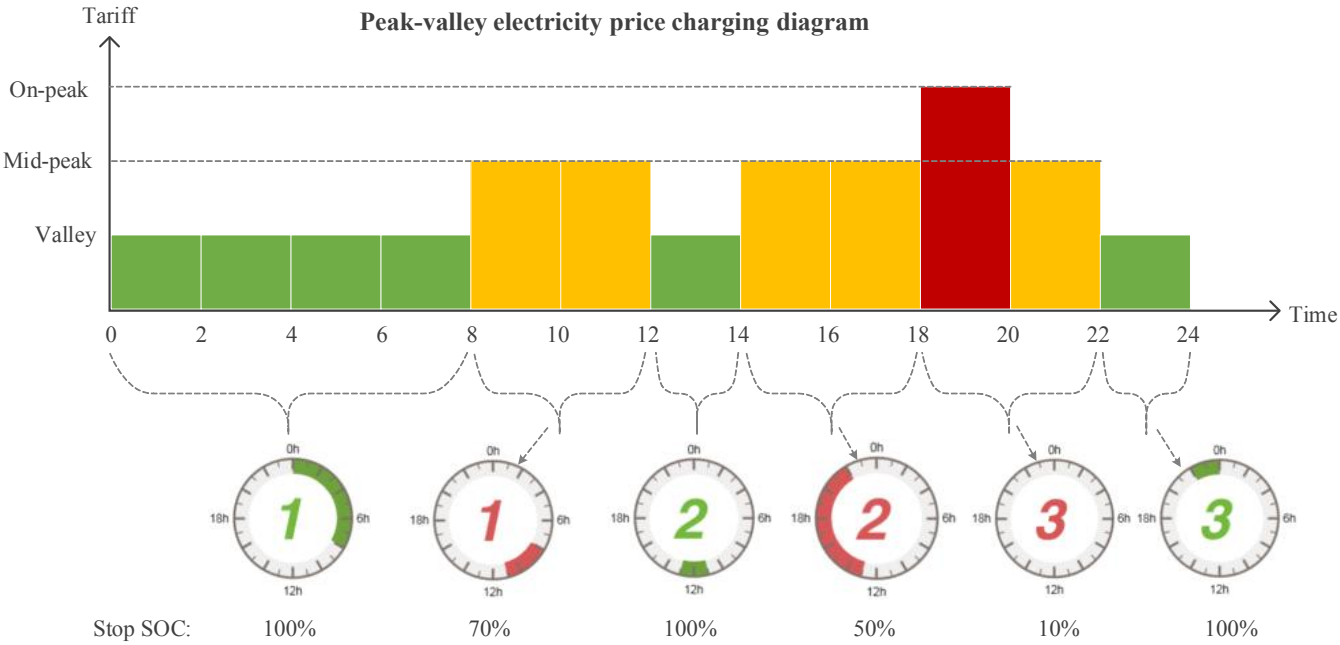

Notice:

1.Before using this function for the first time, please set the local date and time, and then you can set the corresponding time period according to the local peak and valley electricity charges.

2.In the figure above, the green period is the timing charging period, and the red period is the timing discharge period.

6.2.3 Battery Parameter Setting

6.2.3.1 Battery basic setting

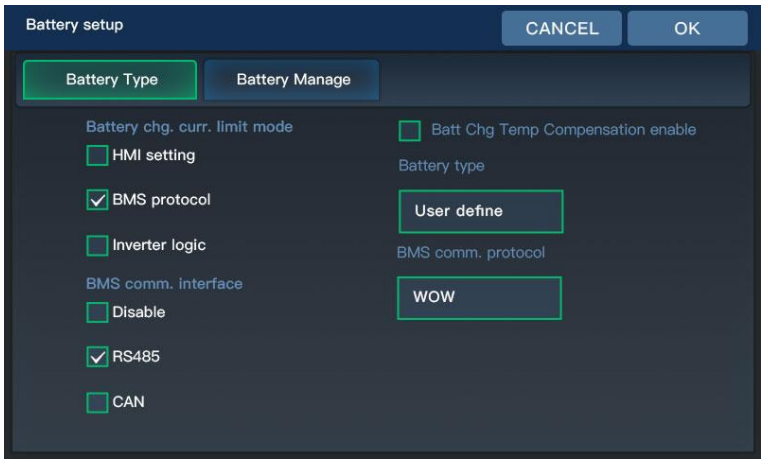

- **Battery type:** This parameter selects the type of battery, please choose the parameters consistent with your battery.
  ① **User define:** All parameters can be set
  ② **SLD:** sealed lead acid battery
  ③ **FLD:** Open lead-acid battery
  ④ **GEL:** Colloidal lead acid battery
  ⑤ **LFP14/15/16:** Lithium iron phosphate battery with 14/15/16 cells
  ⑥ **N13/ N14:** Ternary lithium battery with 13/14 cells
  ⑦ **No battery:** No battery connected
- **BMS comm. Interface:** Choose BMS communication interface, according to the actual battery BMS interface to choose RS485 interface or CAN interface.
- **BMS comm. protocol:** Choose the communication protocol that matches your battery BMS.

NO.	Brand	Protocol name	Type
1	PACEEX	PACE	485 protocol
2	RADAR	RUDA	485 protocol
3	AUTOONE	AOGUAN	485 protocol

NO.	Brand	Protocol name	Type
4	OLITER	OULITE	485 protocol
5	CFGE	CEF	485 protocol
6	Sunwoda	XINWANGDA	485 protocol
7	Dyness	DAQIN	485 protocol
8	SRNE	WOW	485 protocol
9	Pylon tech	PYL	485 protocol
10	FOX ESS	MIT	485 protocol
11	Xinyi energy	XIX	485 protocol
12	PowMr	POL	485 protocol
13	GOTION	GUOX	485 protocol
14	SMK POWER	SMK	485 protocol
15	VILION	VOL	485 protocol
16	SGP	SGP	485 protocol
17	GSL energy	GSL	485 protocol
18	Pylon tech 2	PYT	485 protocol
19	UZENERGY	UZE	CAN protocol
20	DEYE	DEVE	485/CAN protocol
21	LUX POWER	LUX	485/CAN protocol

- **Battery chg. Curr. limit. mode:**

Select the battery charging current limit mode. "HMI" refers to the maximum charging current parameter set through the screen as the current limit value for battery charging. "BMS" means reading the maximum charging current limit given by the battery through BMS communication. "Inverter" means that the charging current is limited by using the current limiting logic built into the inverter, this is used for those battery BMS that do not have a current limiting function according to the SOC, the current limiting logic is shown in the following table:

SOC	Charge current limit value
≥98%	0.0625 * Irate (about 12.5A)
≥95%	0.0125 * Irate (about 25A)
≥90%	0.025 * Irate (about 50A)
≥85%	0.5 * Irate (about 100A)
< 85%	1.0 * Irate (about 200A)

Irate: Rated maximum charging current.

- **Battery Chg. Temp compensation:**

Select whether to enable external temperature detection and battery charging temperature compensation function, only some models have this function.

6.2.3.2 Battery manage setting

Battery management has two pages, which are switched by the arrow on the screen. The first page is used to set the charging parameters, including the following parameters:

- **Maximum chg. voltage:**
  Set the maximum charging voltage when the battery is charged. This parameter is read from the BMS communication when the BMS communication is normal, so it does not need to be set manually. Setup may only be required if lead-acid batteries or battery BMS communication fails.
- **Maximum chg. current:**
  Set the maximum charging current when the battery is charged.
  This parameter is read from BMS communication when BMS communication is normal and does not need to be set manually.
  Setup may only be required if lead-acid batteries or battery BMS communication fails.
- **Batt. Recharging voltage:**
  After the battery is full, the inverter stops charging, and when the battery voltage falls below this voltage value, it resumes charging again. This parameter is invalid when BMS communication is normal.

Battery management has two pages, which are switched by the arrow on the screen. The first page is used to set the charging parameters, including the following parameters:

- **Maximum chg. voltage:**
  Set the maximum charging voltage when the battery is charged. This parameter is read from the BMS communication when the BMS communication is normal, so it does not need to be set manually. Setup may only be required if lead-acid batteries or battery BMS communication fails.
- **Maximum chg. current:**
  Set the maximum charging current when the battery is charged. This parameter is read from BMS communication when BMS communication is normal and does not need to be set manually. Setup may only be required if lead-acid batteries or battery BMS communication fails.
- **Batt. Recharging voltage:**
  After the battery is full, the inverter stops charging, and when the battery voltage falls below this voltage value, it resumes charging again. This parameter is invalid when BMS communication is normal.
- **Battery Curr. stop chg. :**
  Stop charging when the charging current is less than the set value, and this parameter is invalid when BMS communication is normal.
- **Max. chg. Curr. by Grid:**
  When using the grid charging, this parameter is used as the limit value of the grid charging current to the battery, which is the current value of the battery side, not the current value of the AC side.
- **Batt. SOC stop chg. :**
  When the SOC value reaches the set value, the device will stop charging the battery, which is effective when the BMS communication is normal.

The second Settings page is about battery discharge parameters, containing the following parameters:

- **Batt. volt. stop dischg. :**
  Set the battery stop discharge voltage in the hybrid mode, when the battery voltage is less than or equal to the parameter value, the battery will stop discharging, and no alarm event.
- **Batt. soc. stop dischg. :**
  Set the battery stop discharge capacity in the hybrid mode, when the remaining battery capacity is less than or equal to the parameter value, the battery will stop discharging, no alarm event.
- **Batt volt. restart dischg. :**
  Set the restart discharge voltage in the hybrid mode, and when the battery voltage is greater than or equal to the parameter value, the battery enters the discharge state.
- **Batt. SOC restart dischg. :**
  Set the restart discharge capacity in the hybrid mode. When the battery capacity is greater than or equal to the parameter value, the battery enters the discharging state.
- **Battery under volt. Alarm:**
  Set the battery undervoltage alarm value. When the battery voltage is less than the parameter value, the "01" fault code alarm prompt is generated, but the device is not shut down.
- **Batt. under cap. Alarm:**
  Set the battery undercapacity alarm value. When the remaining battery capacity is less than the parameter value, the "30" fault code alarm prompt is generated, but the device is not shut down.
- **Batt volt. low recovery:**
  Set the battery voltage low fault recovery value, when the battery voltage is higher than the parameter value, the device will clear the "04" fault code.
- **Batt. SOC low fault:**
  Set the low protection value of battery capacity. When the remaining battery capacity is lower than the value, the battery stops discharging and the "32" fault code is generated. If the device is working in the off-grid state, the device will turn off the output at this time.
- **Batt voltage low fault:**
  Set the low voltage protection value of the battery. When the battery voltage is lower than the value, the battery stops discharging and the "04" fault code is generated. If the device is working in the off-grid state, the device will turn off the output at this time.
- **Batt. volt. low delay time:**
  Set the battery voltage low protection fault delay time in seconds.
- **Battery max. Curr. dischg. :**
  Set the maximum discharge current value of the battery in the hybrid mode, which is given by the BMS when the BMS communication is normal. The device will control the discharge power so that the battery current does not exceed this parameter value.

Notice:
All voltage parameters are valid when there is no BMS communication, and all SOC parameters are valid when the battery BMS communication is normal.

6.2.3.3 Battery BMS data

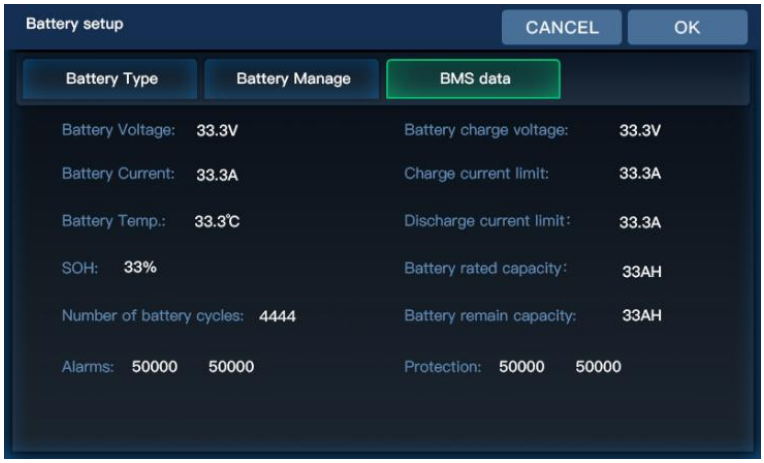

In the "BMS data" TAB page, some raw data information about the battery read from the BMS is displayed, including data such as battery voltage, battery current, battery remaining capacity, battery rated capacity, battery charging limit voltage, charging and discharging limit current.

6.2.4 Grid Parameter Setting:

You will need to enter a password to access this page, the default password is "0000". The parameter page has grid-connected basic function Settings, grid enter service Settings, grid protection Settings and other function Settings.

6.2.4.1 Grid basic function settings

- **Grid standard (subject to the actual display on the screen.):** Choose the local grid-connected standard.
  RULE21: California; HECO: Hawaii;
  UL1741&IEEE1547.1-2020: The rest of the United States;
  GNL: Areas without on-grid standards;
- **Grid frequency:** To select the grid frequency, it is usually not necessary to manually select, and the device will automatically adapt according to the grid frequency.

- **Sell Power Max. :** To set the maximum selling power feed into the grid.
- **Buy Power Max. :** To set the maximum power consumption from the grid.
- **CT ratio:** To set the CT sensor conversion ratio. The standard CT conversion ratio of the device is 2000:1, which does not need to be modified by default. Setting is only required when the customer is configuring the CT sensor with different variable ratios.
- **Zero-export power:** It is used to set the power error when working in anti-flow mode. It is recommended to set 20-100W.
- **On Grid Reactive Power:** It is used to set the reactive power, the default value is 0%, usually the user does not need to change.
- **On Grid PF:** It is used to set the power factor of the grid-connected current, the default value is 1.00, usually the user does not need to change.

6.2.4.2 Grid enter service setting(This setting is not recommended to be changed by customers)

This page is used to set the voltage frequency of connecting to the grid. According to the requirements of the grid connection standard, the voltage and frequency of the grid must be within the set parameter range before the grid connection can be started, otherwise the device will remain off-grid operation.

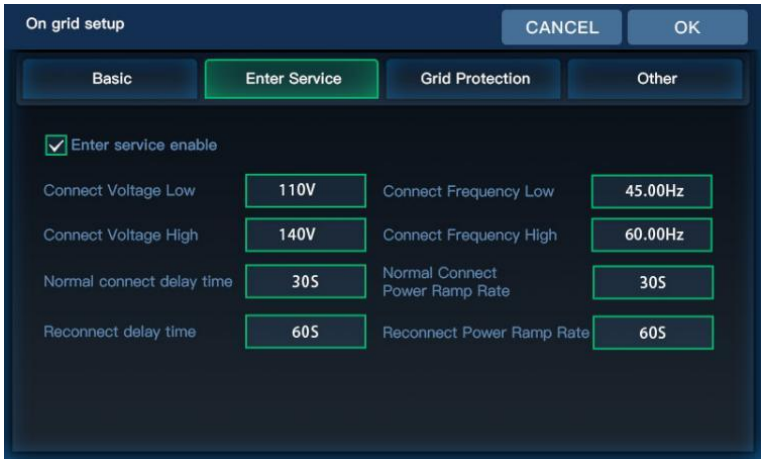

"Connect delay time" is the waiting time used to set the grid connection. It means that after the grid voltage and frequency meet the requirements, the device needs to wait for the time set by this parameter before connecting to the grid.
The "connect power ramp rate" is used to set the increase rate of the grid-connected power after the connection. This parameter indicates the time it takes for the grid-connected power to increase from 0 to the rated power.

6.2.4.3 Grid protection setting(This setting is not recommended to be changed by the customer)

This page is used to set the grid over voltage, under voltage, over frequency and under frequency protection values, and its default parameter values will be set according to the requirements of the grid-connected standard.
Among them, the range of the primary protection parameter is relatively narrow, and the range of the secondary protection parameter is relatively large.

NOTICE

The voltage value in the parameters is the line voltage between the L1 and L2 phases, which is rated at 240V for split phase and 208V for three-phase. All time parameters are given in milliseconds.

6.2.4.4 Other function setting(This setting is not recommended to be changed by customers)

This page allows you to choose whether to enable some features of the grid standard, including the following parameters:

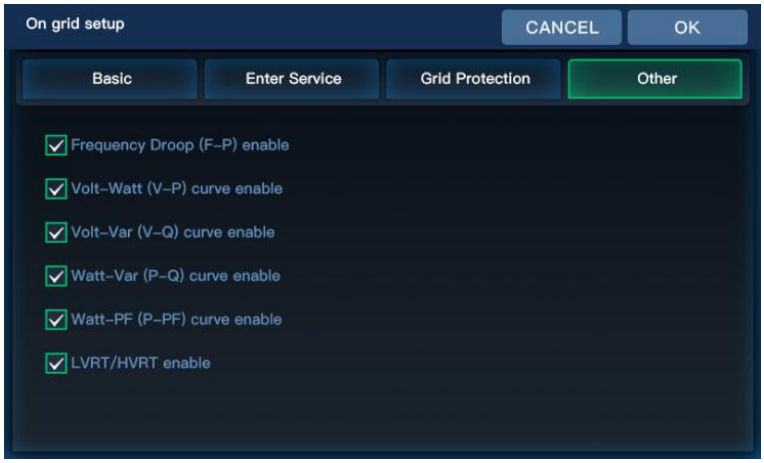

- **Frequency Droop enable:** This function regulates the grid-connected active power of the inverter according to the grid frequency.
- **Volt-Watt curve enable:** This function regulates the grid-connected active power of the inverter according to the grid voltage.
- **Volt-Var curve enable:** This function regulates the grid-connected reactive power of the inverter according to the grid voltage.
- **Watt-Var curve enable:** This function is to regulate the reactive power according to the active power output of the inverter.
- **Watt-PF curve enable:** This function is to adjust the power factor according to the active power output of the inverter.
- **LVRT/HVRT enable:** The low voltage ride-through and the high voltage ride-through.

6.2.5 Advanced Setting

6.2.5.1 Generator

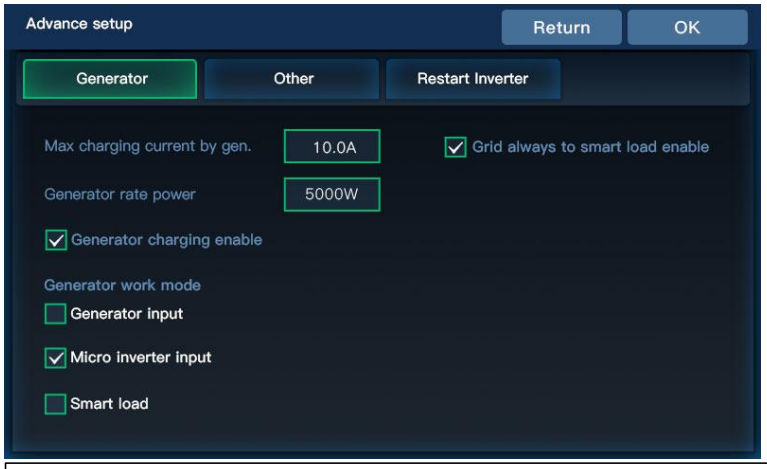

In the "Generator" TAB, you can set whether to enable the generator to charge the battery or not, and the maximum current for charging. The "Generator rate power" parameter represents the rated power of the generator, please input the rated power value on the generator nameplate into this parameter.

When the generator works, the energy is preferentially supplied to the load.

When the sum of the load power and the charging power is greater than the rated power of the generator, the device will automatically reduce the charging power to avoid overload of the generator. When the load power is greater than the rated power, the device reports overload and shuts down the output.

The "Generator work mode" parameter sets the functionality of the Generator port, the default is "Generator input". It can also be set to "Micro inverter input". When set to this function, please ensure that the generator port is connected to the micro grid-connected inverter. Please refer to the wiring diagram for connection method.

And it also can be set as" Smart load" ,when set to this function, please ensure that the generator port is connected to the load.

6.2.5.2 Other

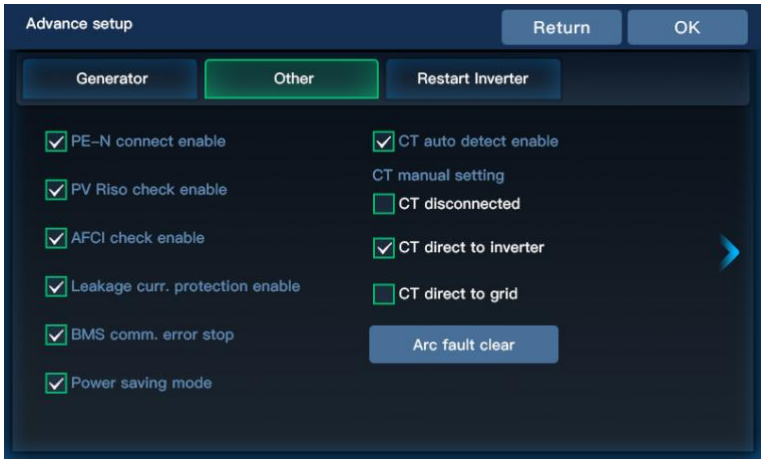

- **PE-N connect enable:** Select whether to enable the PE-N automatic switching function.
- **PV Riso check enable:** Select whether to enable the photovoltaic insulation impedance detection function.
- **AFCI check enable:** Select whether to enable the photovoltaic arc detection function.
- **Leakage Curr. protection enable:** Enable leakage protection function.
- **BMS comm. Error stop:** Select whether to enable BMS communication failure shutdown function. When the BMS communication fails, the battery stops discharging and charging, and if it is in the off -grid state at this time, the output will stop.
- **Power saving mode:** Choose whether to enable power saving mode. In the off-grid state, the inverter will enter the energy-saving mode after 5 minutes in the no-load state (load less than 25Watt). The output voltage will be turned off, and the load will be detected for 10 seconds every 3 minutes. When the load power is greater than 40Watt, the energy-saving mode will be withdrawn. In the hybrid grid state, after the power-saving mode is turned on, the device will increase the battery discharge power to reduce the energy consumption from the grid as much as possible.

【CT Function Operation】

To enable CT and work properly, follow these steps:

1. Make sure that the CT wiring is correct.

Each device is equipped with two CT sensors, which share an RJ45 interface. Firstly, insert the RJ45 plug of the CT into the interface marked with "CT" in the terminal box of the equipment. Then, the CT marked with the L1 character is stuck on the L1 phase power grid cable, and the CT marked with the L2 character is stuck on the L2 phase power grid cable. For CT wiring diagram, please refer to the Wiring instructions section.

Notice:

Please pay attention to the phase sequence and cannot be connected in reverse.
Special attention should be paid to the location where the CT should be installed at the grid entry point, that is, between the household load junction box and the grid entry meter.

2. Installation direction of CT.

There is a symbol with an arrow printed on the surface of the CT sensor, which is the direction of the CT. Normally, when installing the CT, please point the arrow of the CT to the inverter. If the CT arrow points to the grid, that's fine, but make sure that the direction of the two CT sensors is the same.

3. CT enable Settings.

CT enable Settings in the "Other" page of the "Advanced Settings" page. There are two options: "CT auto detect enable" and "CT manual setting".

- The "CT auto detect enable" parameter can be used to automatically detect the mounting direction of the CT. Usually, after the first installation and boot, this parameter will be enabled by default to identify the installation direction of the CT. After successful identification, the enable will be automatically turned off, and the identification result will be synchronized to the "CT manual setting" parameter.
- The "CT manual setting" parameter is used to manually set the orientation of the CT. If you are clear about the orientation of the CT, you can set the orientation of the CT manually.

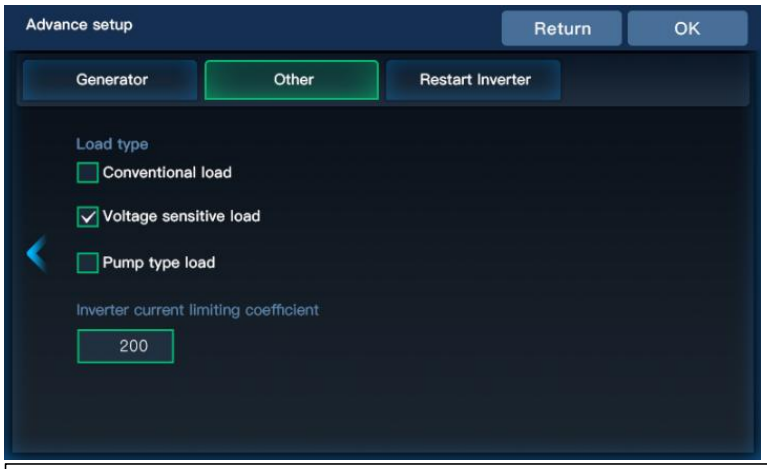

- **Load type:**
Select the type of special load, this parameter usually does not need to be set. But if you run into any of the following problems you can try changing this parameter.

① If the local grid voltage waveform is unstable, resulting in frequent switching from the hybrid state to the off-grid state (the grid is not outage), you can try to choose the "Conventional Load".

② If there are frequent power outages in the local power grid, and the load terminal is connected with loads that are sensitive to voltage, such as fixed-frequency air conditioners. Try selecting "Voltage sensitive load".

③ If the local power grid has frequent power outages, and the load is connected to the motor load of the pump. Try selecting "Pump type load".

- **Inverter current limiting coefficient :** This parameter is used to limit the off-grid inverter output current and usually does not need to be set.

6.2.5.4 Restart Inverter

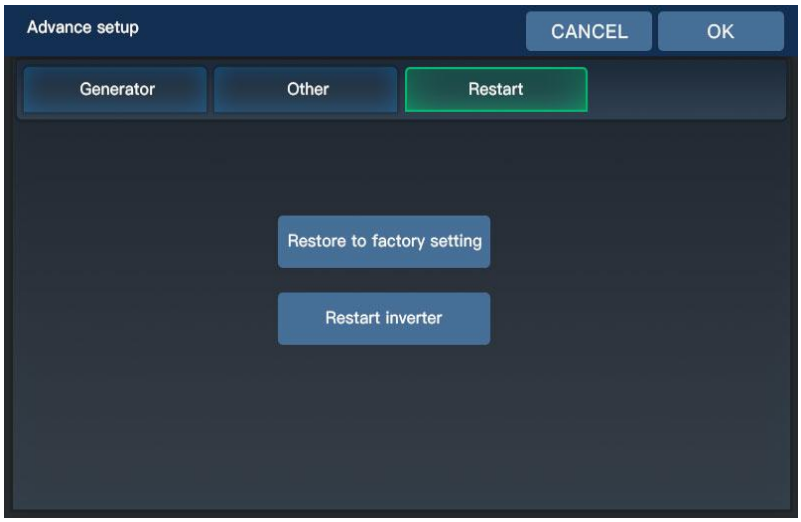

Steps to restore factory Settings:

① Click the "Restore to factory setting" button, and a dialog box will pop up. Click "OK" to confirm, and "configuration successful" will be displayed to indicate that the command to restore the factory setting was successfully issued.

② Then click the "restart inverter" button and click "OK" to confirm that the inverter will restart.

③ After the device reboots successfully, the parameter will be restored to the factory state.

6.3 Recommended Setting

6.3.1 Peak and Valley Electric Charges

Applicable scene: The grid is relatively stable and has peak and valley electricity prices. It is expected to realize economic benefits or reduce electricity costs through the price difference.

Do you want to sell electricity ?	Hybrid grid mode	CT function	PV energy manage	Batt. energy manage	Grid charge enable	On grid max. power	Peak shaving
Yes	On grid	Disable	First to charging	Battery to grid sell	Ignore	0~Rated power	enable
No	Limit power to ups load	Disable	First to charging	Battery to ups load	Ignore	0~Rated power	enable
No	Limit power to home load	Enable	First to charging	Battery to home load	Ignore	0~Rated power	enable

How this scenario works:

① It is main logic is to perform timed charging and discharging.

② During the timed charging period:

- When grid charging or grid and PV mixed charging, ignoring the forbidden setting of "Grid charge enable".
- Grid charging power is determined by the power setting value in each charging period.
- When grid and PV mixed charging, if the PV has residual energy, it can be carried out with load or feed into grid.

③ During the timed discharging period:

- When the battery discharges until the voltage or capacity is lower than the set "stop discharge voltage or SOC" parameter, the battery stops discharging, and the grid will not charge the battery; When there is a PV, the PV can charge the battery.
- When discharging, the discharge power does not exceed the discharge power value set in each time period.

6.3.2 Generate Power for Self Use

Applicable scene: In areas with a stable power grid and no peak-valley electricity price difference, maximizing the use of photovoltaic energy to reduce electricity costs.

Do you want to sell electricity ?	Hybrid grid mode	CT function	PV energy manage	Batt. energy manage	Grid charge enable	On grid max. power	Peak shaving
Yes	On grid	Disable	First to load	Battery to ups load	Disable	0~Rated power	Disable
	On grid	Enable	First to load	Battery to home load	Disable	0~Rated power	Disable
No	Limit power to ups load	Disable	First to load	Battery to ups load	Disable	Ignore	Disable
	Limit power to home load	Enable	First to load	Battery to home load	Disable	Ignore	Disable

How this scenario works:

① The photovoltaic energy is preferentially supplied to the load, and the residual energy after meeting the load power is used to charge the battery.

② When the PV power is insufficient to supply the load or there is no PV, the battery discharges to replenish the energy.

③ When PV and battery are loaded at the same time, PV power is given priority to the load.

④ Forbid grid charging and reduce grid electricity consumption.

6.3.3 Priority to Sell Electricity

Applicable scene: In areas with a stable power grid and no peak-valley electricity price difference, where the electricity selling price is higher than the purchasing price. Economic benefits are expected by prioritizing electricity sales.

Do batteries sell electricity?	Hybrid grid mode	CT function	PV energy manage	Batt. energy manage	Grid charge enable	On grid max. power	Peak shaving
Yes	On grid	Disable	First to load	Battery to grid sell	Disable	0~Rated power	Disable
	On grid	Enable	First to load	Battery to grid sell	Disable	0~Rated power	Disable
No	On grid	Disable	First to load	Battery to ups load	Disable	0~Rated power	Disable
	On grid	Enable	First to load	Battery to home load	Disable	0~Rated power	Disable

How this scenario works:

① Implement the logic of selling electricity first.

② The photovoltaic energy has the priority to sell electricity. After meeting the selling power, the remaining energy will charge the battery.

③ Photovoltaic power to meet the selling power refers to photovoltaic output power ≥ UPS load power +Home load power + set selling power. Because the photovoltaic energy must first pass through the load, and then feed into the grid.

④ When the photovoltaic power is weak, the battery power is used as a supplement, and the amount of the supplement power depends on the setting of the "battery energy management" parameter.

6.3.4 Battery Storage Charge

Applicable scene: The power grid is unstable, and frequent power outages occur. It is expected to give priority to improving the reserve of the remaining battery capacity for use in case of power outages.

Do you want to sell electricity ?	Hybrid grid mode	CT function	PV energy manage	Batt. energy manage	Grid charge enable	On grid max. power	Peak shaving
Yes	On grid	Disable	First to charging	Standby	Enable	0~Rated power	Disable
No	Limit power to ups load	Disable	First to charging	Standby	Enable	Ignore	Disable

How this scenario works:

① Perform the logic of priority charging to improve battery reserve.

② When both the power grid and PV are available, initiate hybrid charging with PV energy given priority.

③ After the PV energy meets the charging power, the residual energy is provided to the load.

④ During a power grid outage, the device switches to battery inverter output mode. If PV is available, it operates in a hybrid mode using both solar and battery power, with PV energy prioritized.

⑤ After the battery is depleted, the device triggers a dry contact action. If a diesel generator is available, it will be started to supply power to the load.

⑥ When the diesel generator is connected, it is decided whether to charge the battery according to the setting of the "Generator charging enable" parameter.

⑦ The diesel generator power is prioritized for carrying the load. The charging power will be dynamically adjusted based on the load power, ensuring that the combined load power and charging power do not exceed the value set by the "Generator Rated Power" parameter.

6.4 Connection Mode

1.Basic

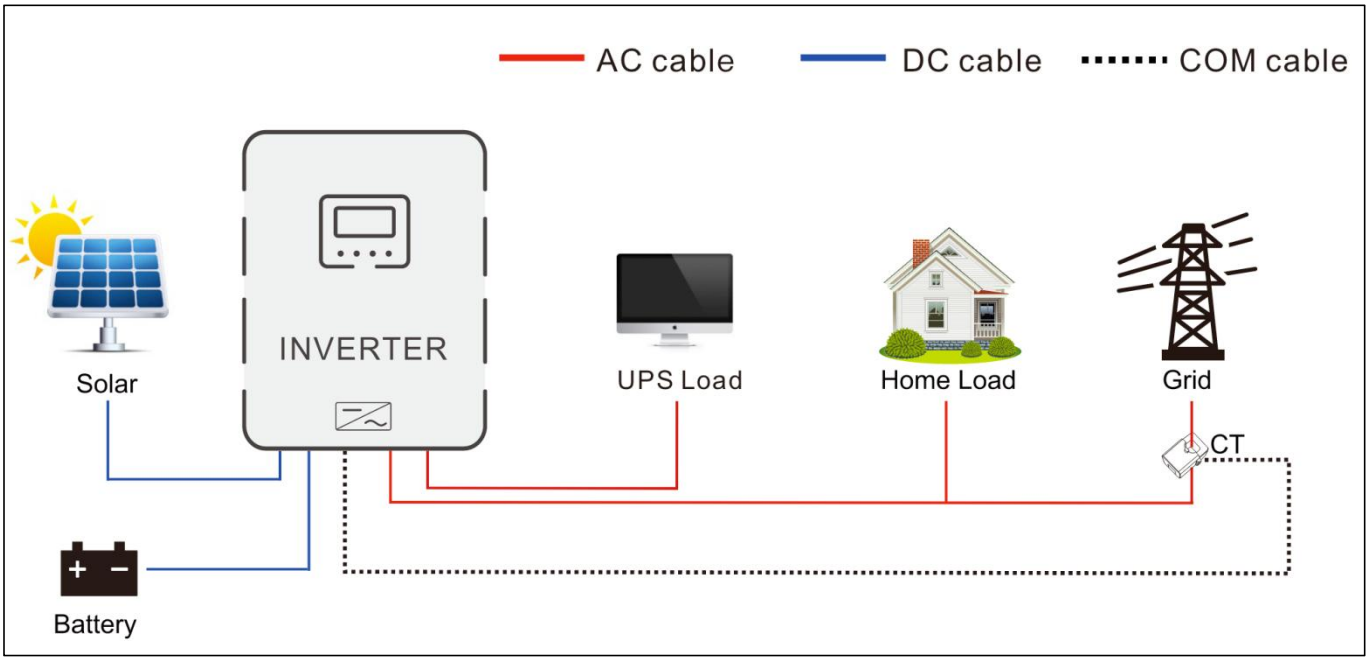

2.Connecting to a generator

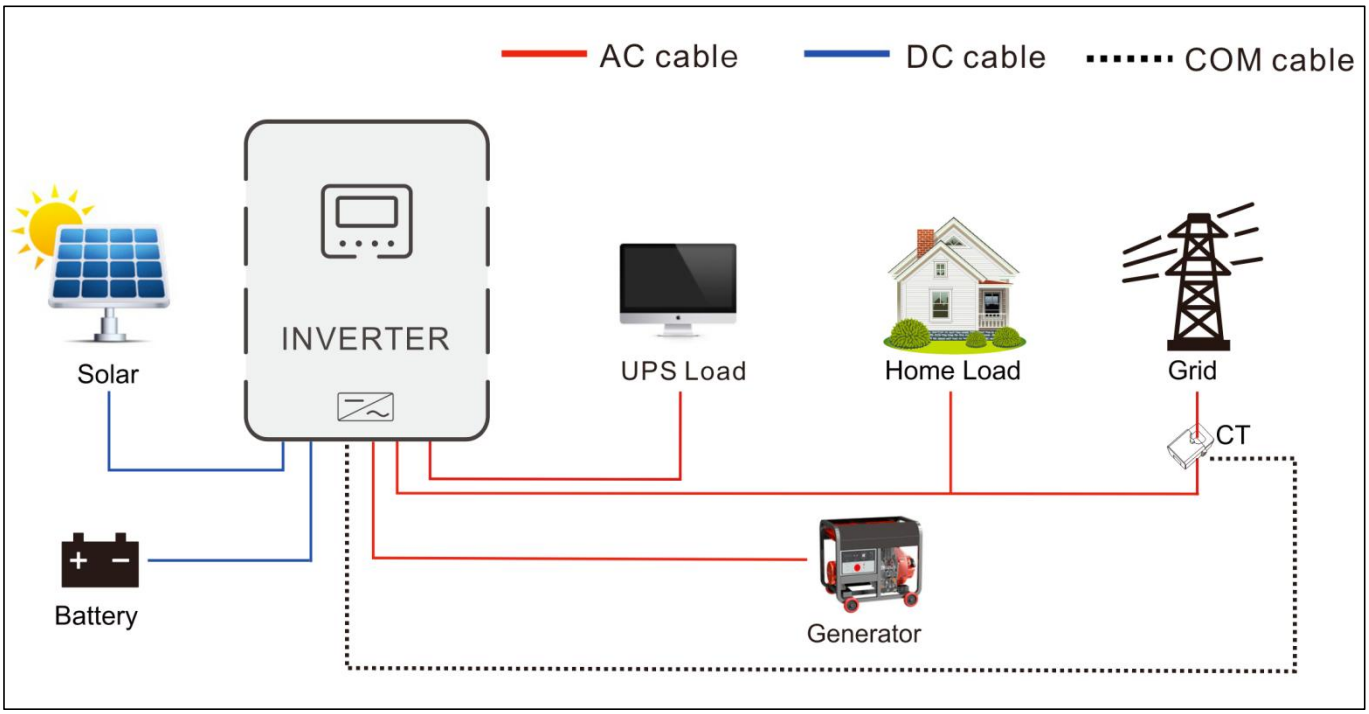

3.Connecting to smart load

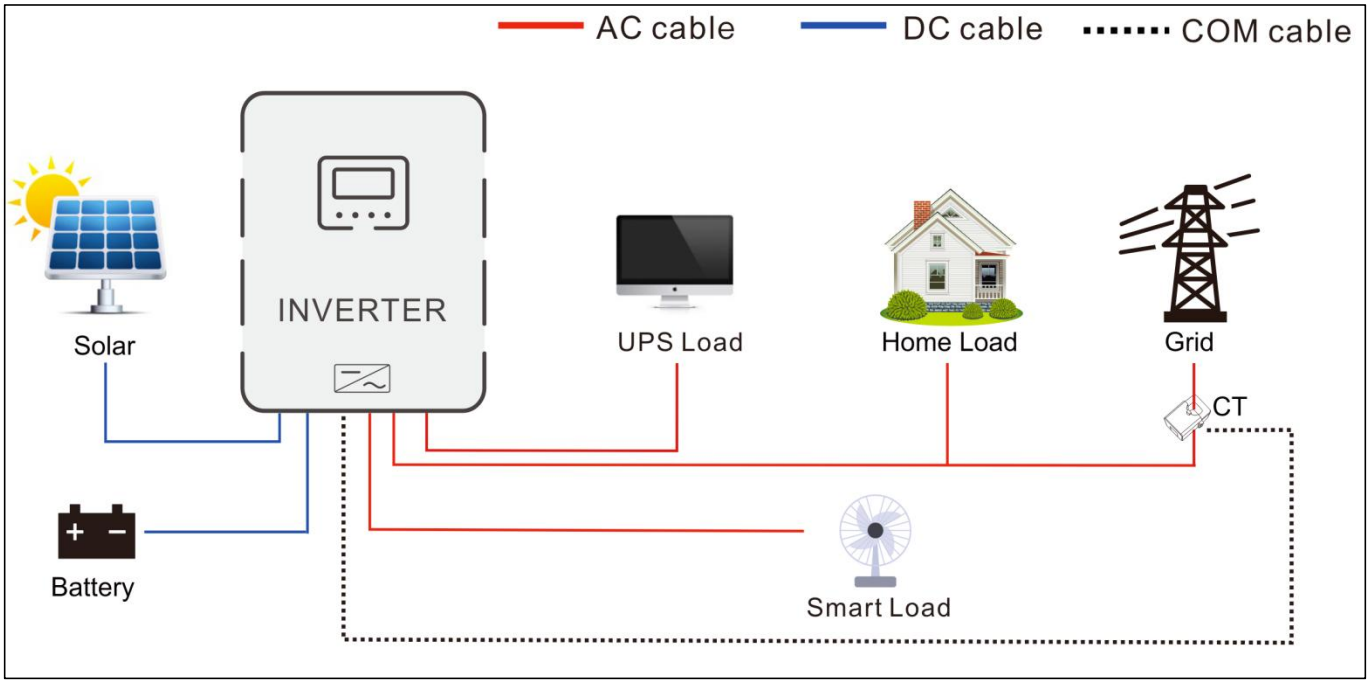

4.Connecting to On-Grid Inverter

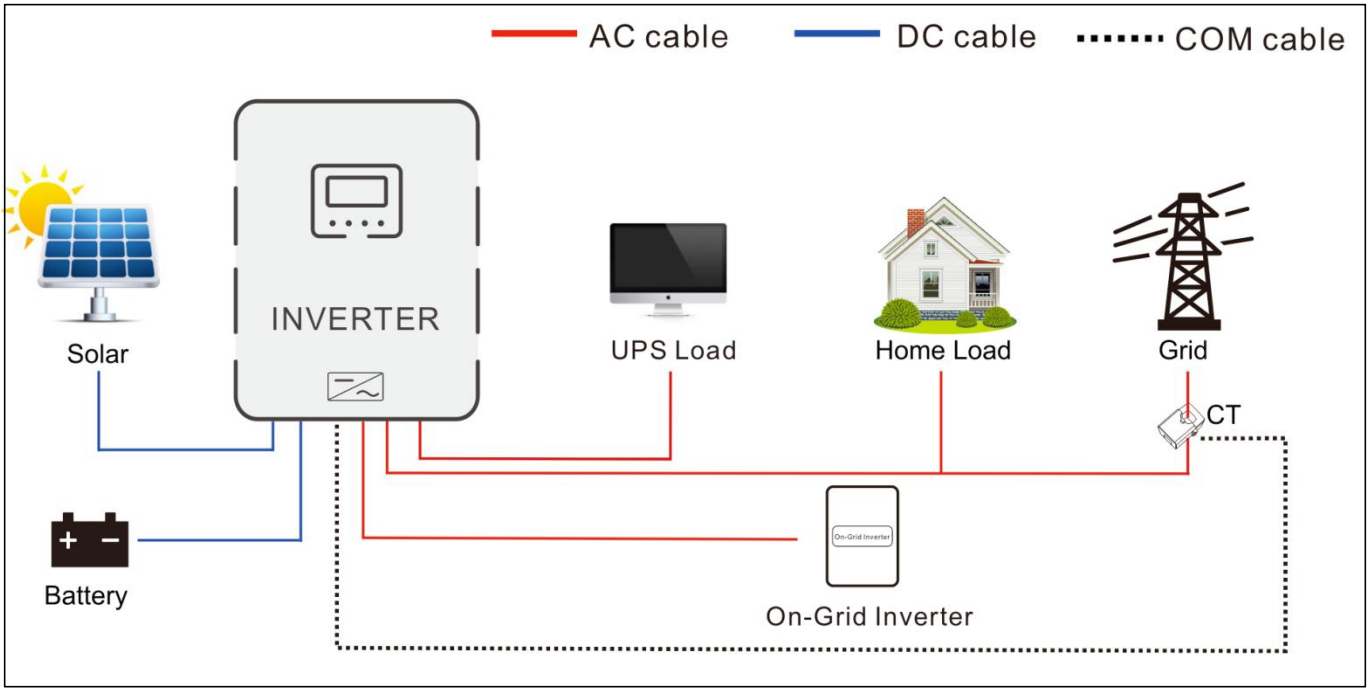

5.AC Coupling

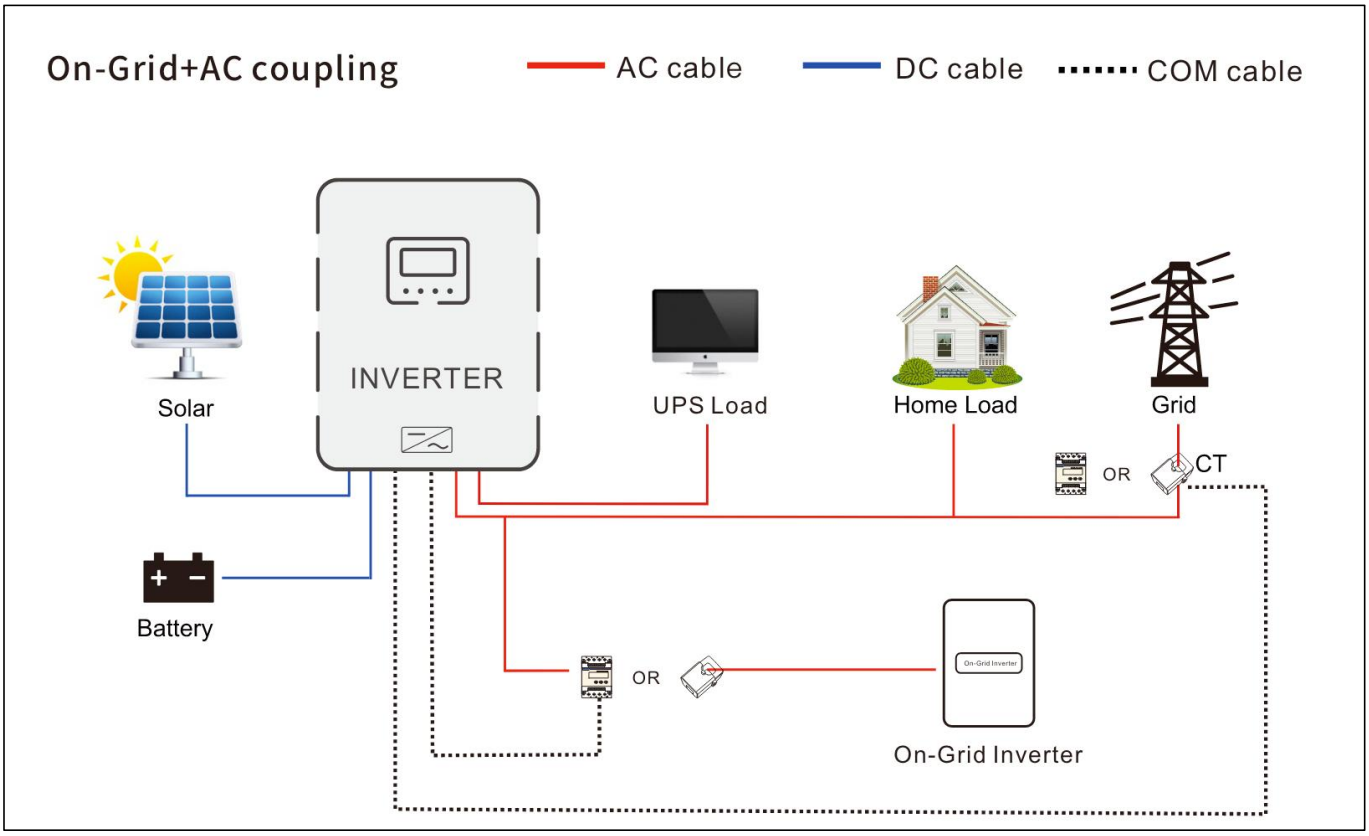

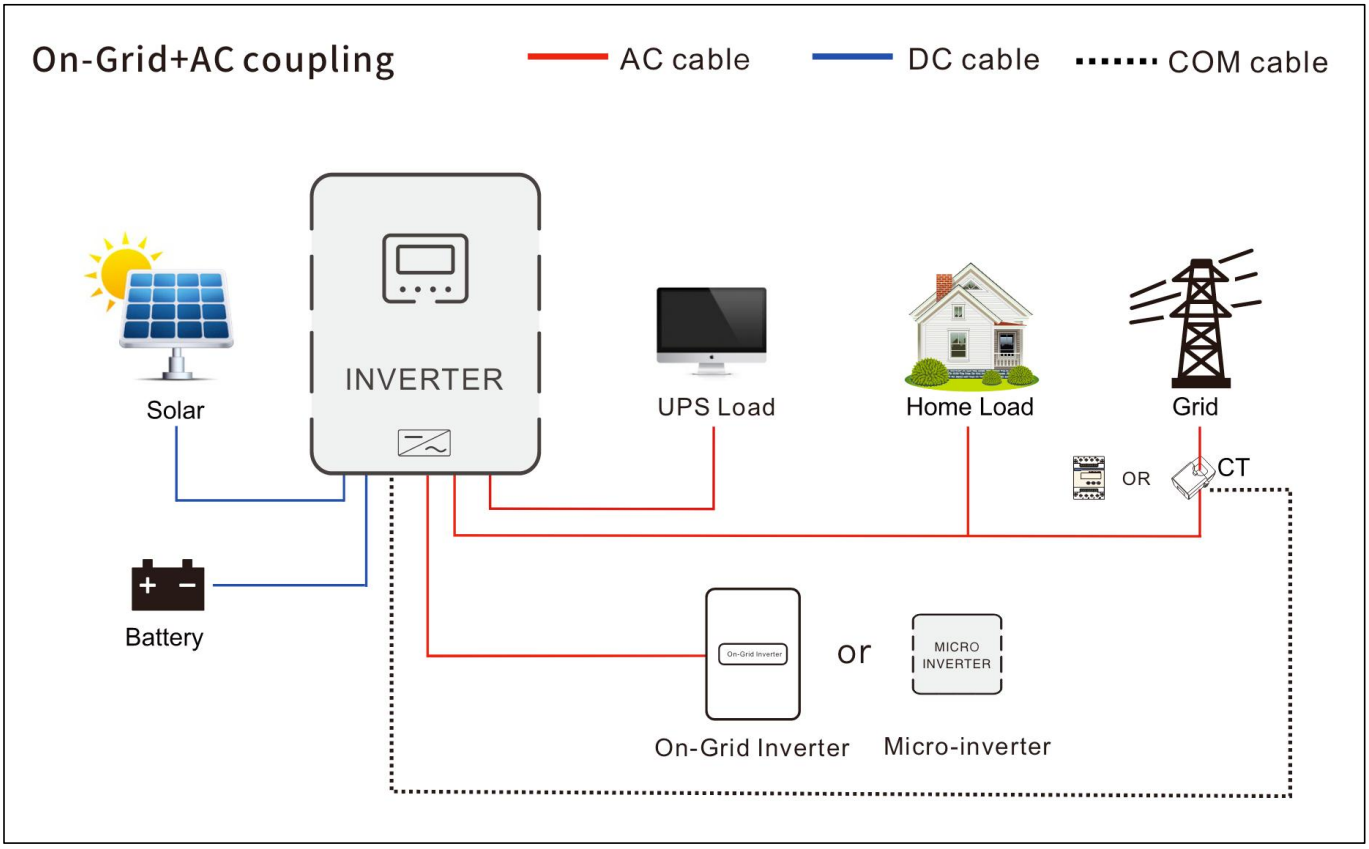

7. Communication

7.1 Overview

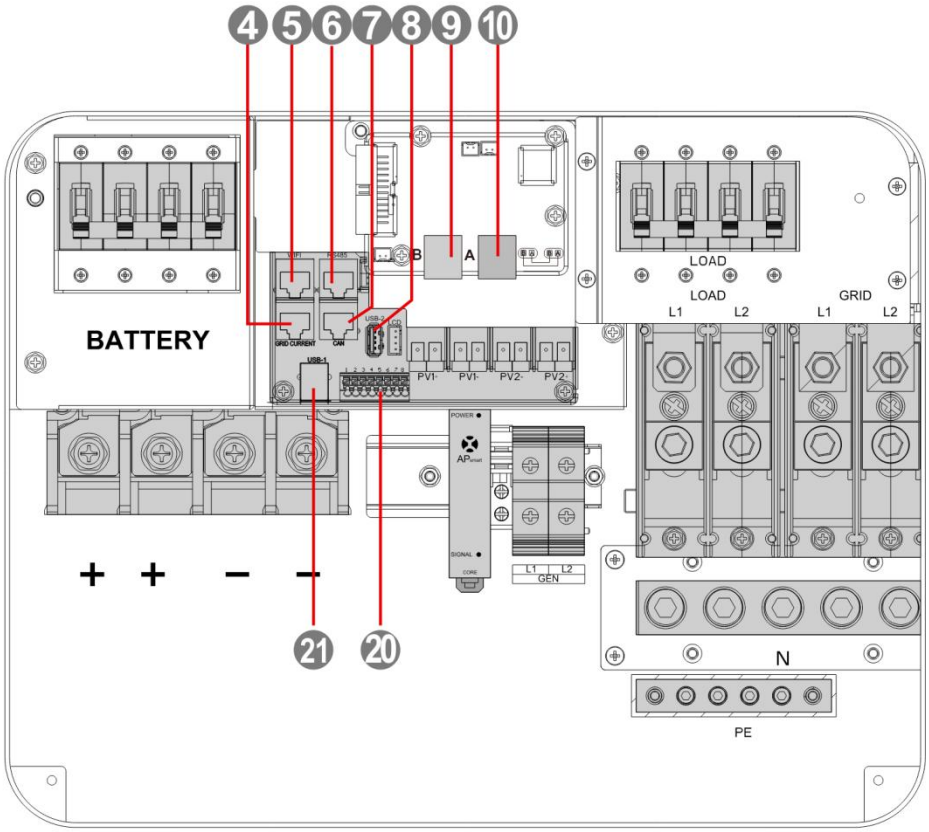

4	External CT port
5	WiFi port
6	BMS RS485 port
7	BMS CAN port
8	USB-2 port
9	Parallel port B
10	Parallel port A
20	Dry contact
21	USB-1 port

7.2 USB-2 Port

The user can read and modify device parameters through this port by using the host software. Please contact us for the host software installation package if you require one.

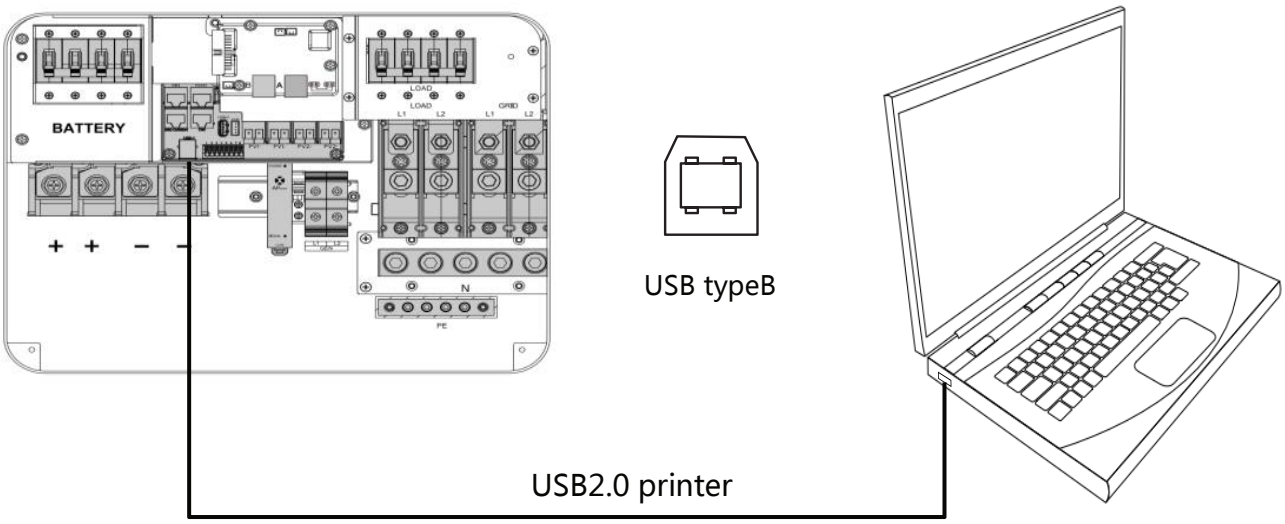

7.3 WiFi Port

The WiFi port is used to connect to the Wi-Fi/GPRS data acquisition module, which allows users to view the operating status and parameters of the inverter through the cell phone APP. Only can connect one port.

- **WiFi Port 1 (either one)**

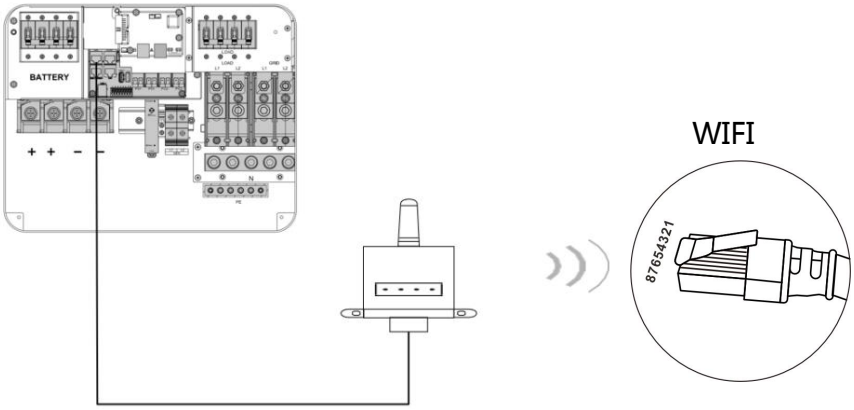

RJ45	Definition
Pin 1	5V
Pin 2	GND
Pin 3	/
Pin 4	/
Pin 5	/
Pin 6	/
Pin 7	RS485-A
Pin 8	RS485-B

- **WiFi Port 2 (either one)**

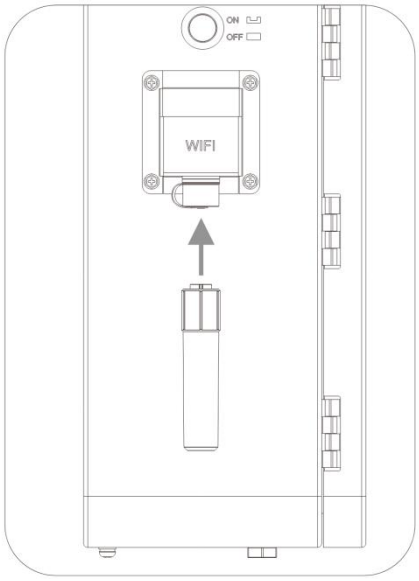

7.4 RS485 Port

The RS485 port is used to connect to the BMS of Li-ion battery for RS485 communication.

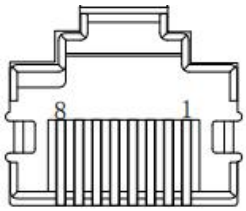

RS485

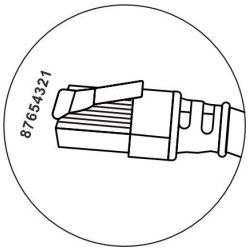

RJ45	Pin 1	Pin 2	Pin 3	Pin 4	Pin 5	Pin 6	Pin 7	Pin 8
Description	RS485-B	RS485-A	/	CANH	CANL	/	RS485-A	RS485-B

7.5 CAN Port

The CAN port is used to connect to the BMS of Li-ion battery for CAN communication.

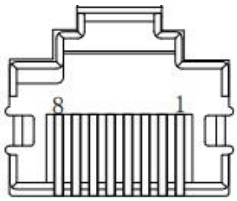

CAN

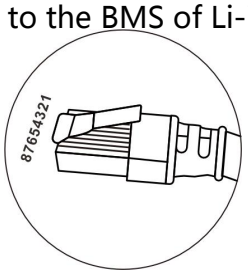

RJ45	Pin 1	Pin 2	Pin 3	Pin 4	Pin 5	Pin 6	Pin 7	Pin 8
Description	/	/	/	CANH	CANL	/	/	/

7.6 USB-1 Port

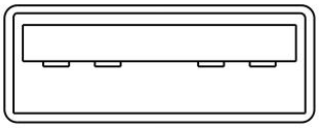

It is used to updated the screen firmware by USB flash disk.

7.7 External CT Port

Length of CT Output Line Wrap : 4m; Normally The CT direction is "to inverter"

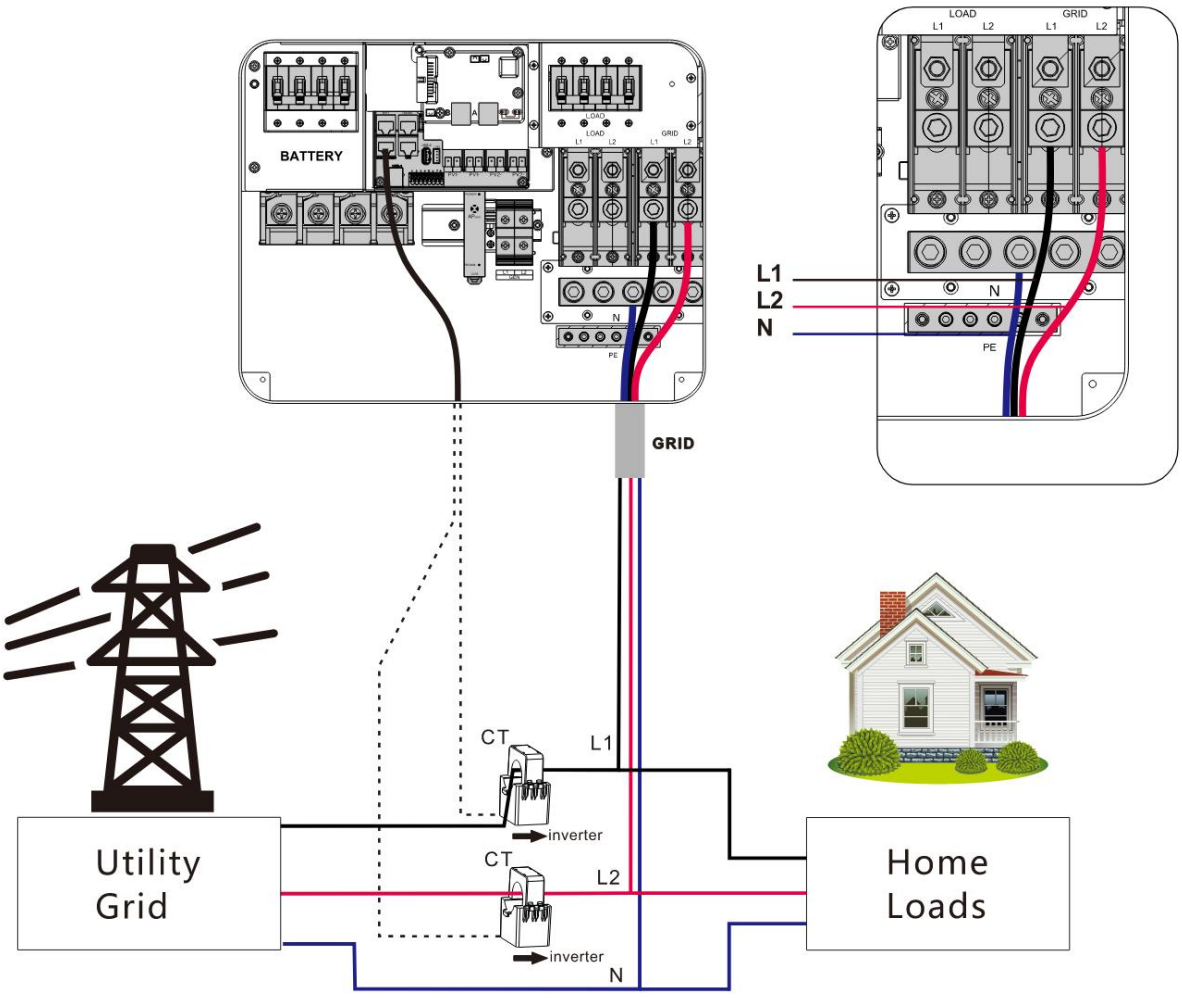

Current transformer (CT) dimensions:(mm)

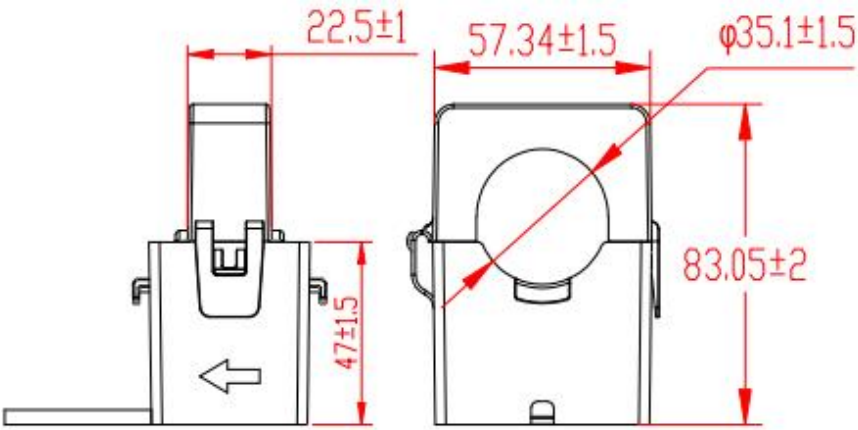

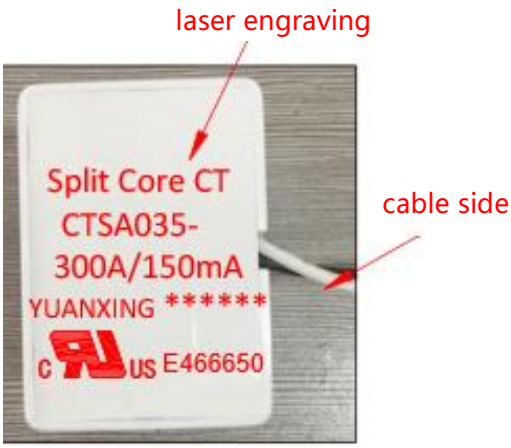

7.8 Dry Contact

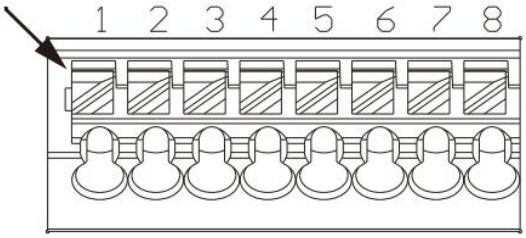

Dry contact port with 3 functions:

1. RSD power supply
2. Temperature sampling (reserved)
3. Generator remote start/stop

Function	Description
RSD power supply	PIN 1 is GND , PIN 2 is RSD 12V+
Temperature sampling (reserved)	Pin 1 & Pin 5 can be used for battery temperature sampling compensation.
Generator remote start/stop	When the generator is connected, the following conditions need to be met. ① Remote start the generator when there is no grid connection. ② When there is no BMS connection, the generator will be remotely started when the battery voltage is below the undervoltage alarm threshold or when the battery switches to the grid voltage. ③ When connected to the BMS, the generator will be remotely started when the battery SOC is lower than the set point for switching to grid SOC. ④ When there is no BMS connection, the generator will be remotely stopped when the battery voltage reaches the voltage threshold for switching from grid to battery, or when the battery is fully charged. ⑤ When the BMS is connected, the generator will be remotely shut down when the battery SOC is lower than the set value for switching from grid to battery SOC. ⑥ Remote shutdown of the generator when the battery is fully charged. **Remote start of the generator:** Pin 6 to Pin 7 is normally open, Pin 7 to Pin 8 is normally closed. **Remote generator shutdown:** Pin 6 to 7 is normally closed, Pin 7 to 8 is normally open. (Max voltage and current:Pin 6/7/8 outputs 125Vac/1A, 230Vac/1A, 30Vdc/1A)

⚠ *NOTICE*

If you need to use the remote start/stop function of the generator with dry contact, ensure that the generator has ATS and supports remote start/stop.

8. Fault and Remedy

8.1 Fault Code

Fault Code	Fault Name	Whether it affects the output or not	Description
01	BatVoltLow	Yes	Battery undervoltage alarm.
02	BatOverCurrSw	Yes	Battery discharge average current overcurrent (software protection).
03	BatOpen	Yes	Battery not-connected alarm
04	BatLowEod	Yes	Battery undervoltage stop discharge alarm.
05	BatOverCurrHw	Yes	Battery overcurrent (hardware protection)
06	BatOverVolt	Yes	Charging overvoltage protection
07	BusOverVoltHw	Yes	Bus overvoltage (hardware protection)
08	BusOverVoltSw	Yes	Bus overvoltage (software protection)
09	PvVoltHigh	Yes	PV overvoltage protection.
10	PvBoostOCSw	No	Boost overcurrent (software protection)
11	PvBoostOCHw	No	Boost overcurrent (hardware protection)
12	HESCommErr	Yes	Master-slave HES communication failure
13	OverloadBypass	Yes	Bypass overload protection
14	OverloadInverter	Yes	Inverter overload protection.
15	AcOverCurrHw	Yes	Inverter overcurrent hardware protection
16	AuxDSpReqOffPWM	Yes	Requesting a shutdown fault from the chip
17	InvShort	Yes	Inverter short-circuit protection.
18	Bussoftfailed	Yes	Bus soft start failure
19	OverTemperMppt	No	Buck heat sink over temperature protection
20	OverTemperInv	Yes	Inverter AC output with load or AC charging radiator over-temperature protection.
21	FanFail	Yes	Fan blockage or failure fault
22	EEPROM	Yes	Memory failure
23	ModelNumErr	Yes	Model setting error
24	Busdiff	Yes	Positive and negative bus voltage imbalance
25	BusShort	Yes	Busbar short circuit
26	Rlyshort	Yes	Inverter AC output backfeed to bypass AC output
28	LinePhaseErr	Yes	Utility input phase error
29	BusVoltLow	Yes	Low bus voltage protection
30	BatCapacityLow1	Yes	Alarm given when battery capacity rate is lower than 10% (setting BMS to enable validity).

31	BatCapacityLow2	No	Alarm given when battery capacity rate is lower than 5% (setting BMS to enable validity).
32	BatCapacityLowStop	Yes	Inverter stops when battery capacity is low (setting BMS to enable validity).
34	CanCommFault	Yes	CAN communication fault in parallel operation.
35	ParaAddrErr	Yes	Parallel ID（communication address）setting error.
37	ParaShareCurrErr	Yes	Parallel current sharing fault
38	ParaBattVoltDiff	Yes	Large battery voltage difference in parallel mode.
39	ParaAcSrcDiff	Yes	Inconsistent AC input source in parallel mode.
40	ParaHwSynErr	Yes	Hardware synchronization signal error in parallel mode.
41	InvDcVoltErr	Yes	Inverter DC voltage error.
42	SysFwVersionDiff	Yes	Inconsistent system firmware version in parallel mode.
43	ParaLineContErr	Yes	Parallel line connection error in parallel mode.
44	Serial number error	Yes	No serial number set at factory
45	Error setting of split-phase mode	Yes	Item “Parallel” setting error
49	Grid over voltage	Yes	Selects the local corresponding grid standard.
50	Grid under voltage	Yes	
51	Grid over Frequency	Yes	
52	Grid under Frequency	Yes	
53	Grid loss	Yes	
54	Grid DC current over	Yes	
55	Grid standard un init	Yes	
56	Low insulation resistance fault	No	PV1+, PV2+ and PV- abnormally low impedance to ground.
57	Leakage current overload fault	Yes	System leakage current exceeds limit.
58	BMSComErr	No	BMS communication failure
60	BMSUnderTem	No	BMS alarm battery low temperature.
61	BMSOverTem	Yes	BMS alarm battery over temperature. (Effective after successful BMS communication)
62	BMSOverCur	Yes	BMS alarm battery over current.(Effective after successful BMS communication)
63	BMSUnderVolt	No	BMS alarm low battery. (Effective after successful BMS communication)

8.2 Troubleshooting

Fault code	Faults	Remedy
Display	No display on the screen	Check if the battery switch or PV switch is closed; whether the switch is in the "ON" state; press any button on the screen to exit the screen sleep mode.
【06】	Battery overvoltage protection	Check that the battery voltage does not exceed the protection value. If it does, discharge the battery until the voltage falls below the battery over-voltage recovery point.
【01】 【04】	Battery undervoltage protection	Charge the battery until it returns to the low voltage disconnection recovery voltage.
【21】	Fan failure	Check if the fan is not turning or blocked by foreign object.
【19】 【20】	Heat sink over temperature protection	When the temperature of the device is cooled below the recovery temperature, normal charge and discharge control is resumed.
【13】 【14】	Bypass overload protection, inverter overload protection	① Reduce the use of power equipment; ② Restart the unit to resume load output.
【17】	Inverter short-circuit protection	① Check the load connection carefully and clear the short-circuit fault points; ② Re-power up to resume load output.
【09】	PV overvoltage	Use a multimeter to check if the PV input voltage exceeds the maximum allowable input voltage rated.
【03】	Battery disconnected alarm	Check if the battery is not connected or if the battery circuit breaker is not closed.
【40】 【43】	Parallel connection fault	Check if the parallel line is not connected well, such as loose or wrong connection.
【35】	Parallel ID setting error	Check whether the setting of parallel ID number is repeated.
【37】	Parallel current sharing fault	Check if the parallel current sharing line is not connected well, such as loose or wrong connection.
【39】	Inconsistent AC input source in parallel mode	Check whether the parallel AC inputs are from the same input interface.
【42】	Inconsistent system firmware version in parallel mode	Check whether the software version of each inverter is consistent.
【44】	Serial number error	Incorrect device serial number setting
【45】	Parallel mode error	There is a device in the parallel system with the wrong parallel mode setting.
【49】	High grid voltage	Check that the grid voltage is within the normal range, if the grid voltage is abnormal, wait until the grid voltage is restored.
【50】	Low grid voltage	Check that the grid voltage is within the normal range, if the grid voltage is abnormal, wait until the grid voltage is restored.
【51】	High grid frequency	Check that the grid frequency is within the normal range, if the grid frequency is abnormal, wait until the grid frequency is restored.
【52】	Low grid frequency	Check that the grid frequency is within the normal range, if the grid frequency is abnormal, wait until the grid frequency is restored.

【53】	Grid unconnected	Check if the grid is correctly connected, e.g. if the switch is closed and if the grid is disconnected.
【54】	Grid-connected current with DC component over	Power down and restart the device, if it continues to report faults, contact the manufacturer after sales.
【55】	Grid standard not set	Setting standards for grid integration
【56】	Low insulation resistance fault	Check that the system is well grounded and that the PV modules and cables are not worn
【57】	Leakage current overload fault	Check that the system is well grounded and that the loads are not operating abnormally.

NOTICE

If you encounter a fault with the product that cannot be solved by the methods in the table above, please contact our after-sales service for technical support and do not disassemble the equipment yourself.

9. Protection and Maintenance

9.1 Protection Features

No.	Protection Feature	Instruction
1	PV current limiting protection	When the charging current or power of the PV array configured exceeds the PV input rated value, the inverter will limit the input power and charge at the rated.
2	PV input over-voltage	If the PV voltage exceeds the maximum value allowed by the hardware, the machine will report a fault and stop the PV boost to output a sinusoidal AC wave.
3	PV night reverse current protection	At night, the battery is prevented from discharging through the PV module because the battery voltage is greater than the voltage of PV module.
4	Utility input overvoltage protection	When the mains voltage exceeds 140Vac, the mains charging will be stopped and the output will be inverted.
5	AC input under-voltage protection	When the mains voltage falls below 90Vac, the mains charging will be stopped and the output will be inverted.
6	Battery over-voltage protection	When the battery voltage reaches the over-voltage cut-off point, the PV and the utility will automatically stop charging to prevent the battery from being overcharged and damaged.
7	Battery under-voltage protection	When the battery voltage reaches the under-voltage cut-off point, the inverter will automatically stop the battery discharge to prevent damage from over-discharging the battery
8	Battery over-current protection	After a period when the battery current exceeds that allowed by the hardware, the machine will switch off the output and stop discharging the battery.
9	AC output short-circuit protection	When a short-circuit fault occurs at the load output for more than 200ms, the output AC voltage will be turned off immediately, and then manually re-powered and turned on before normal output can be restored. (Non-utility bypass condition)

10	Heat sink over-temperature protection	When the internal temperature of the inverter is too high, the inverter will stop charging and discharging; when the temperature returns to normal, the inverter will resume charging and discharging.
11	Inverter over-load protection	After triggering the overload protection the inverter will resume output after 3 minutes, 5 consecutive overloads will switch off the output until the inverter is restarted.
12	AC output reverse	Prevents AC back flow from the battery inverter to the bypass AC input.
13	Bypass over-current protection	Built-in AC input over-current protection circuit breaker
14	Bypass phase inconsistency protection	When the phase of the bypass input and the phase of the inverter split do not match, the inverter disables switching to the bypass output to prevent the load from dropping out or short-circuiting when switching to the bypass.

9.2 Maintenance

To maintain optimal long-term performance, it is recommended to perform the following inspections twice a year for inverter systems:

1.Ensure that the airflow around the inverter is not blocked and remove any dirt or debris from the radiator.

2. Check that all exposed conductors are not damaged by sunlight, friction with other surrounding objects,
dry rot, insect or rodent damage, etc. The conductors need to be repaired or replaced if necessary.

3.Verify that the indications and displays are consistent with the operation of the equipment, note any
faults or incorrect displays and take corrective action if necessary.

4.Check all terminals for signs of corrosion, insulation damage, high temperatures or burning/discolouration and tighten terminal screws.

5.Check for dirt, nesting insects and corrosion, clean as required，Clean the insect screen regularly.

6.If the lightning arrester has failed, replace the failed arrester in time to prevent lightning damage to the inverter or other equipment of the user.

⚠ DANGER

Make sure that the inverter is disconnected from all power sources and that the capacitors are fully discharged before carrying out any checks or operations to avoid the risk of electric shock.

10. Datasheet

MODEL	HEBP4880U240-Pro	HEBP48100U240-Pro	HEBP48120U240-Pro	Settable
Inverter Output				
Rated Output Power	8800W	10000W	@240V 12000W @208V 10400W	
Max. Peak Power	1.5 times rated power @10 S; 2 times rated power @0.5 S			
Rated Output Voltage	120/240Vac (Split-phase) 120/208V(Three-phase)			√
Max. Continuous Output Current	@240V 36.6A @208V 42.3A	@240V 41.7A @208V 48.1A	50A	
Load Motor Capacity	5HP	6HP	6HP	
Locked Rotor Amps (LRA)	123A (Ipeak)			
Rated AC Frequency	50/60Hz			√
Waveform	Pure Sine Wave			
Parallel capacity	1-6 units			
Battery				
Battery Type	Li-ion / Lead-Acid / User Defined			√
Rated Battery Voltage	48Vdc			
Voltage Range	40-60Vdc			√
Max. Grid Charging Current	200A			√
Max. Generator Charging Current	90A			√
Max. Hybrid Charging Current	240A			√
PV Input				
No. of MPPT Trackers	2			
Max. PV array power	6600W+6600W	7500W+7500W	9000W+9000W	
Max. Input Current	32A+32A			
Short Current Isc	40A+40A			
Max. Open Circuit Voltage	550Vdc/550Vdc			
MPPT Voltage Range	125-450Vdc/125-450Vdc			
Grid / Generator Input				
Input Voltage Range	90-140Vac			
Frequency Range	50/60Hz			
Continuous Grid Passthrough Current	200A			
Continuous Generator Passthrough Current	50A			

Efficiency		
MPPT Tracking Efficiency	99.9%	
Max. Efficiency	97.5%	
CEC Efficiency	96.5%	
Protection		
Integrated	Reverse polarity protection，DC switch rating for each MPPT，Output over-voltage protection varistor，Output over current protection，Ground fault monitoring,Grid monitoring，Pole sensitive leakage current monitoring unit，AFCI，RSD	
Interface		
Communication port	RS485 / CAN / USB / Dry contact	√
External Modules	Wi-Fi / GPRS(Optional)	√
General Data		
Dimensions	840x440x260mm	
Weight	48kg	
Protection Degree	IP65	
Operating Temperature Range	-25 to +60℃, >45℃ derated	
Noise	<60dB	
Self-comsumption	<100W	
Cooling Method	Heat sink + intelligent fan cooling	
Certified Specifications		
Safety standards	UL1741&IEEE1547.1-2020,CEC, RULE 21, HECO	
EMC	FCC 15 class B	
RoHS	Yes	

SRNE Solar Co,.Ltd

Mail	service@szshuori.com
Web	www.srnesolar.com
Address	4-5F,Building13A,Taihua Wutong Industrial Park ,Gushu Development Zone , Hangcheng Street,Baoan, Shenzhen, China PR